REV DATE: 2003

NOTES:

1. TYPE A MANHOLE DESIGNATES MANHOLES WITH PRECAST CONCENTRIC CONE SECTIONS.
2. TYPE B MANHOLE DESIGNATES MANHOLES WITH TOP SLABS.
3. TOP SLAB AND BASE SECTION DETAILS, SEE STANDARD PLAN NO 200b.
4. MAXIMUM DIMENSION FROM OUTSIDE MANHOLE WALL TO THE FIRST PIPE JOINT, THE GREATER OF 1/2 INSIDE PIPE DIAMETER OR 1'–0".
5. FOR TYPE A MANHOLE, LOCATE MANHOLE STEPS ON THE SIDE PERPENDICULAR TO THE DIRECTION OF THE FLOW IN THE CHANNEL.
6. FOR TYPE B MANHOLE, LOCATE MANHOLE STEPS OPPOSITE TO THE DOWNSTREAM OPENING.
7. TOTAL HEIGHT OF AN EXTENSION, MANHOLE FRAME AND LEVELING BRICKS SHALL NOT EXCEED 2'–2".
8. MANHOLE BASE SECTIONS SHOWN IN SECTION A–A AND SECTION B–B ARE TYPICAL FOR TYPE A AND TYPE B MANHOLES.
9. THE MAXIMUM HOLE SIZE SHALL BE THE OUTSIDE DIAMETER OF THE PIPE PLUS THE MANHOLE WALL THICKNESS. THE MINIMUM HOLE SIZE SHALL BE THE OUTSIDE DIAMETER OF THE PIPE PLUS 4 INCHES. MINIMUM DISTANCE BETWEEN HOLES IS 8 INCHES.
10. PRECAST MANHOLE COMPONENTS SHALL CONFORM TO ASTM C 478. JOINTS BETWEEN PRECAST COMPONENTS SHALL BE RUBBER GASKETED CONFORMING TO ASTM C 443.

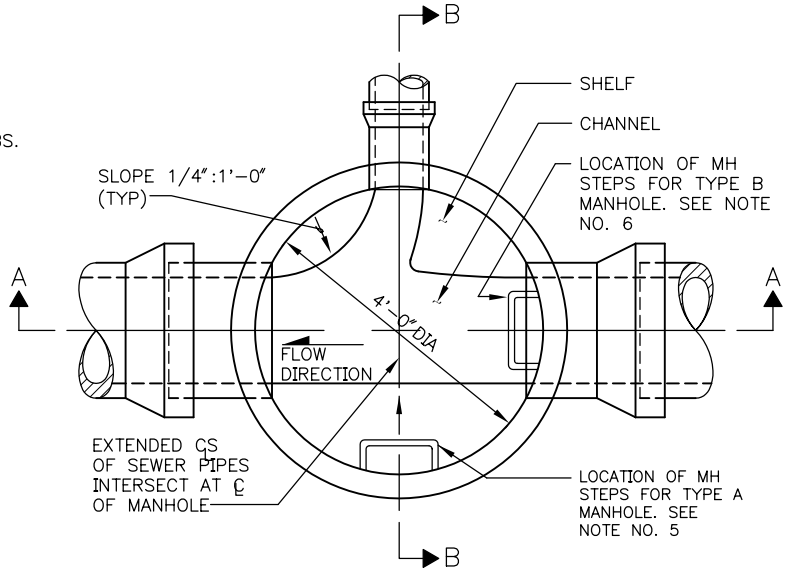

PLAN VIEW
(TOP REMOVED)

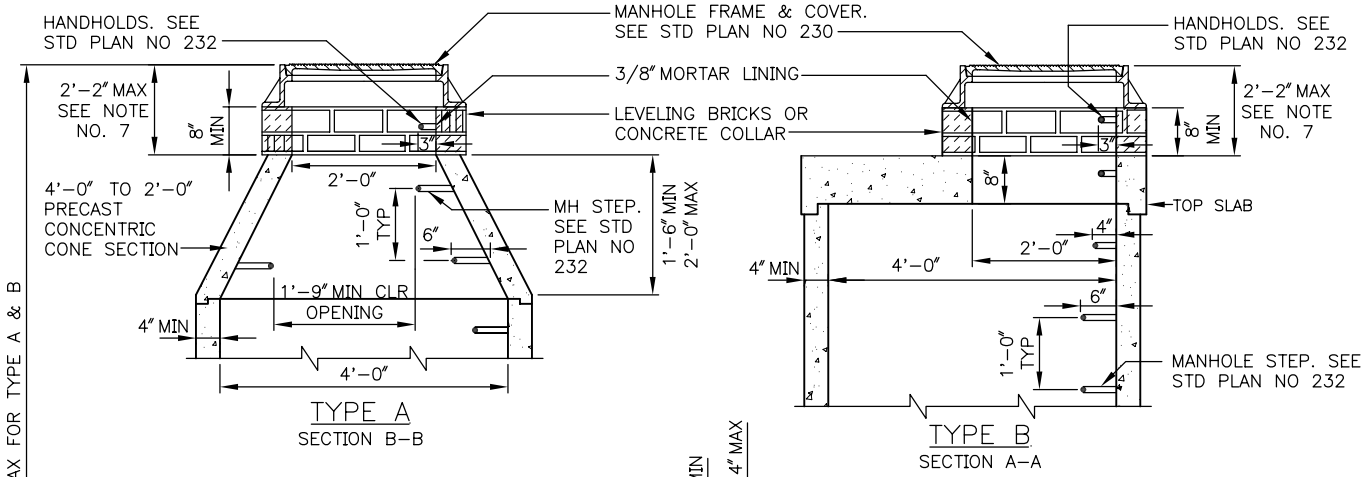

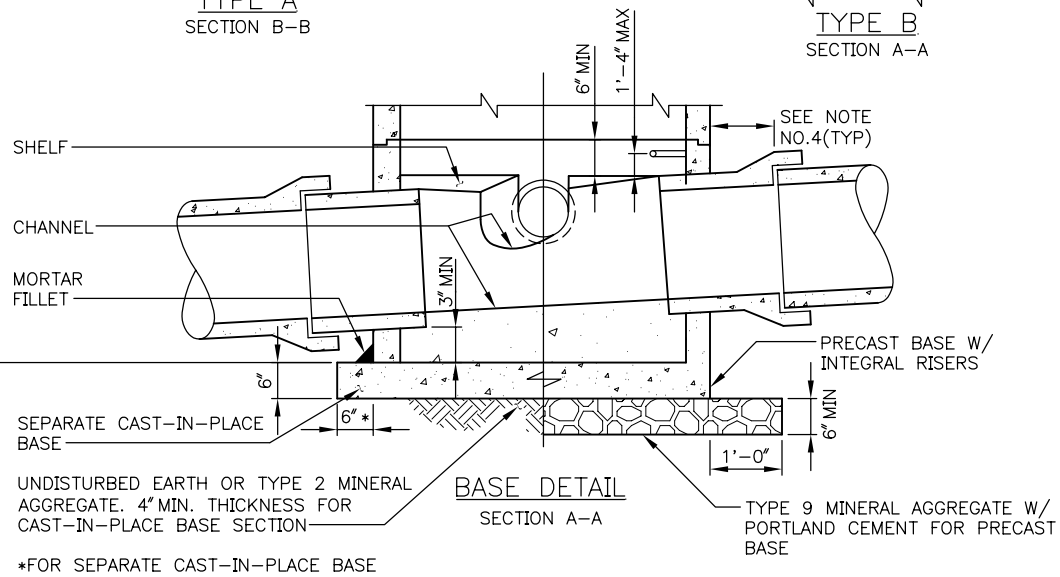

BASE DETAIL
SECTION A–A

*FOR SEPARATE CAST–IN–PLACE BASE

REF STD SPEC SEC 7-05

City of Seattle	NOT TO SCALE	TYPE 200 MANHOLE

REV DATE: 2003

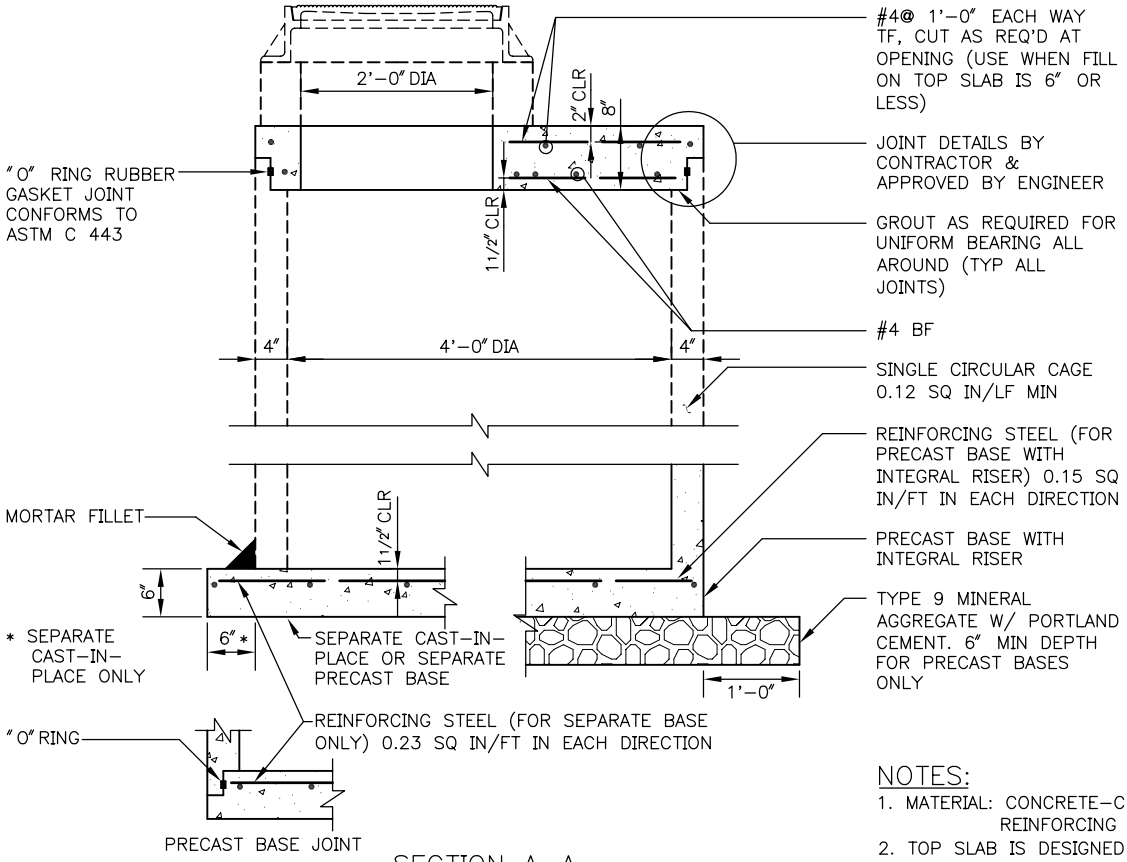

SECTION A-A

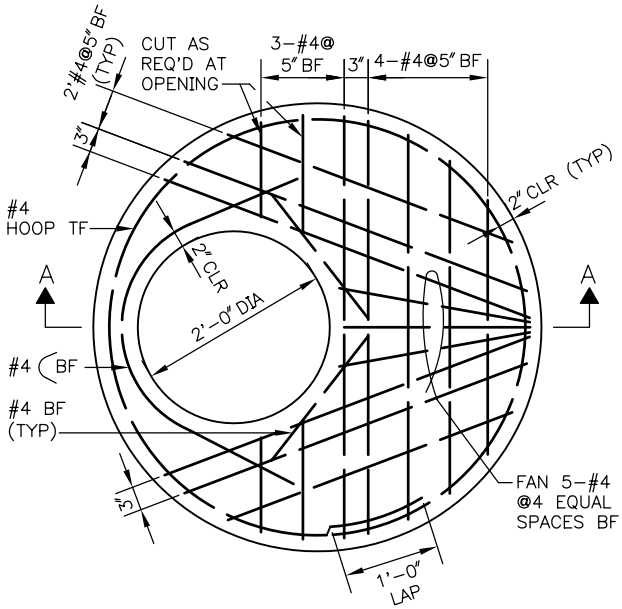

TYPE 200 MH-TOP SLAB

NOTES:

1. MATERIAL: CONCRETE-CLASS AX
   REINFORCING STEEL-ASTM A 615 GR 60
2. TOP SLAB IS DESIGNED FOR 3'-0" MAX COVER
   BASE IS DESIGNED FOR 20'-0" MAX COVER
3. HEIGHT 8'-0" TO 12'-0":
   MIN. REQUIRED SOIL BEARING = 3300 LBS/SQ FT
4. HEIGHT 12'-0" TO 20'-0":
   MIN. REQUIRED SOIL BEARING = 3800 LBS/SQ FT

REF STD SPEC SEC 7-05

City of Seattle	NOT TO SCALE	TYPE 200 MANHOLE TOP & BOTTOM SLABS

REV DATE: 2003

NOTES:

1. TYPE A MANHOLE DESIGNATES MANHOLES WITH PRECAST CONCENTRIC CONE SECTIONS.
2. TYPE B MANHOLE DESIGNATES MANHOLES WITH TOP SLABS.
3. TOP SLAB AND BASE SECTION DETAILS, SEE STANDARD PLAN NO 201b.
4. MAXIMUM DIMENSION FROM OUTSIDE MANHOLE WALL TO THE FIRST PIPE JOINT, THE GREATER OF 1/2 INSIDE PIPE DIAMETER OR 1'–0".
5. FOR TYPE A MANHOLE, LOCATE MANHOLE STEPS ON THE SIDE PERPENDICULAR TO THE DIRECTION OF THE FLOW IN THE CHANNEL.
6. FOR TYPE B MANHOLE, LOCATE MANHOLE STEPS OPPOSITE TO THE DOWNSTREAM OPENING.
7. TOTAL HEIGHT OF AN EXTENSION, MANHOLE FRAME AND LEVELING BRICKS SHALL NOT EXCEED 2'–2".
8. MANHOLE BASE SECTIONS SHOWN IN SECTION A–A AND SECTION B–B ARE TYPICAL FOR TYPE A AND TYPE B MANHOLES.
9. THE MAXIMUM HOLE SIZE SHALL BE THE OUTSIDE DIAMETER OF THE PIPE PLUS THE MANHOLE WALL THICKNESS. THE MINIMUM HOLE SIZE SHALL BE THE OUTSIDE DIAMETER OF THE PIPE PLUS 4 INCHES. MINIMUM DISTANCE BETWEEN HOLES IS 8 INCHES.
10. PRECAST MANHOLE COMPONENTS SHALL CONFORM TO ASTM C 478. JOINTS BETWEEN PRECAST COMPONENTS SHALL BE RUBBER GASKETED CONFORMING TO ASTM C 443.

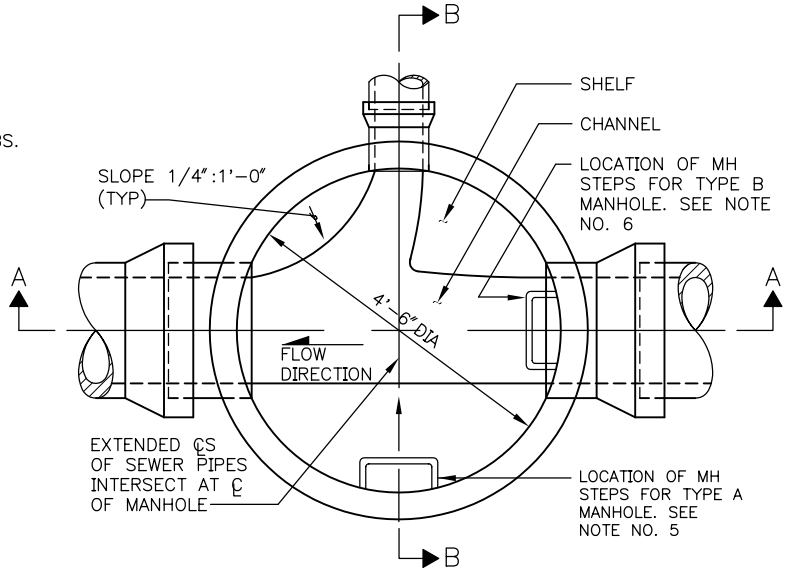

PLAN VIEW
(TOP REMOVED)

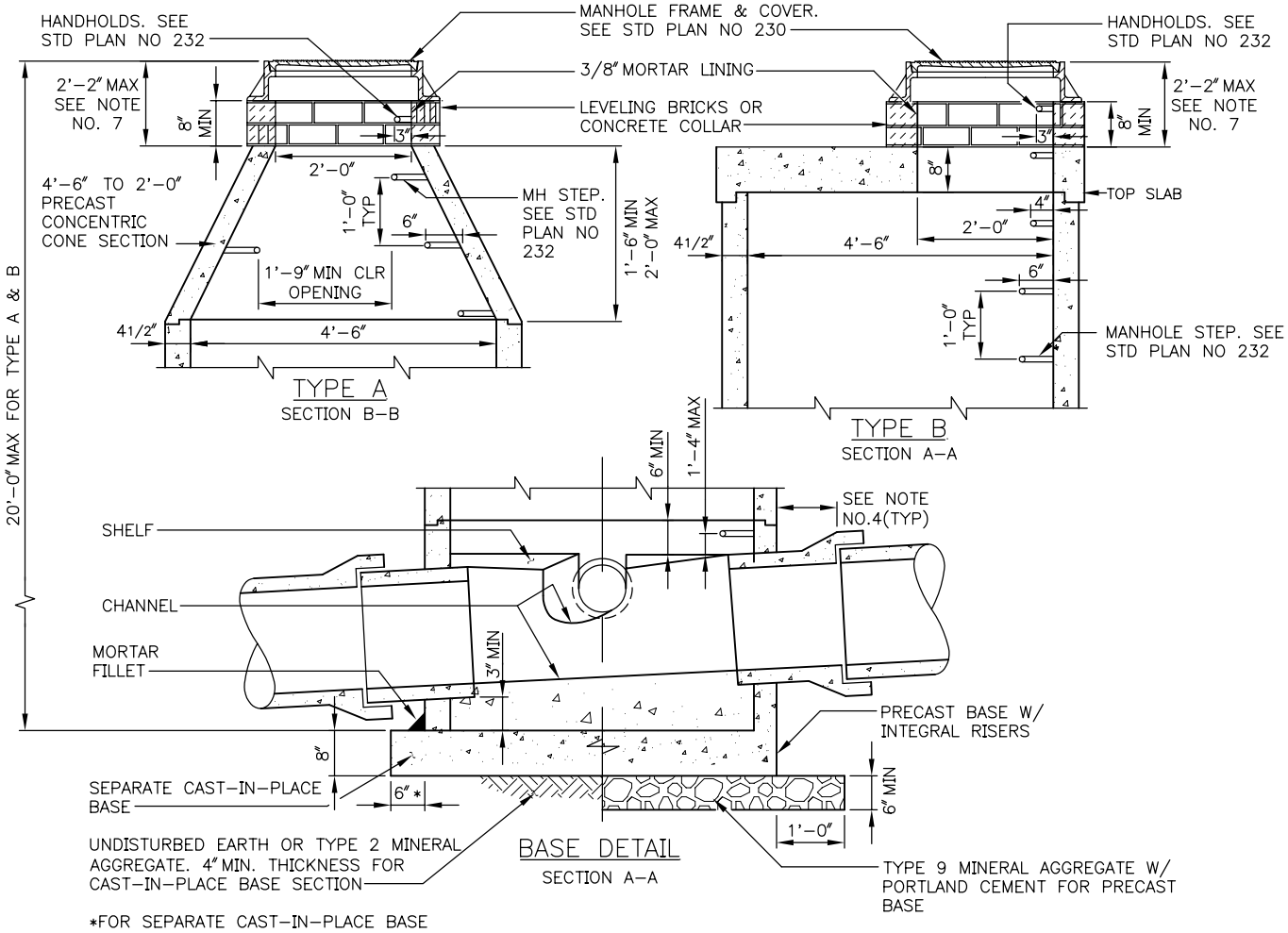

REF STD SPEC SEC 7-05

City of Seattle	NOT TO SCALE	TYPE 201 MANHOLE

REV DATE: 2003

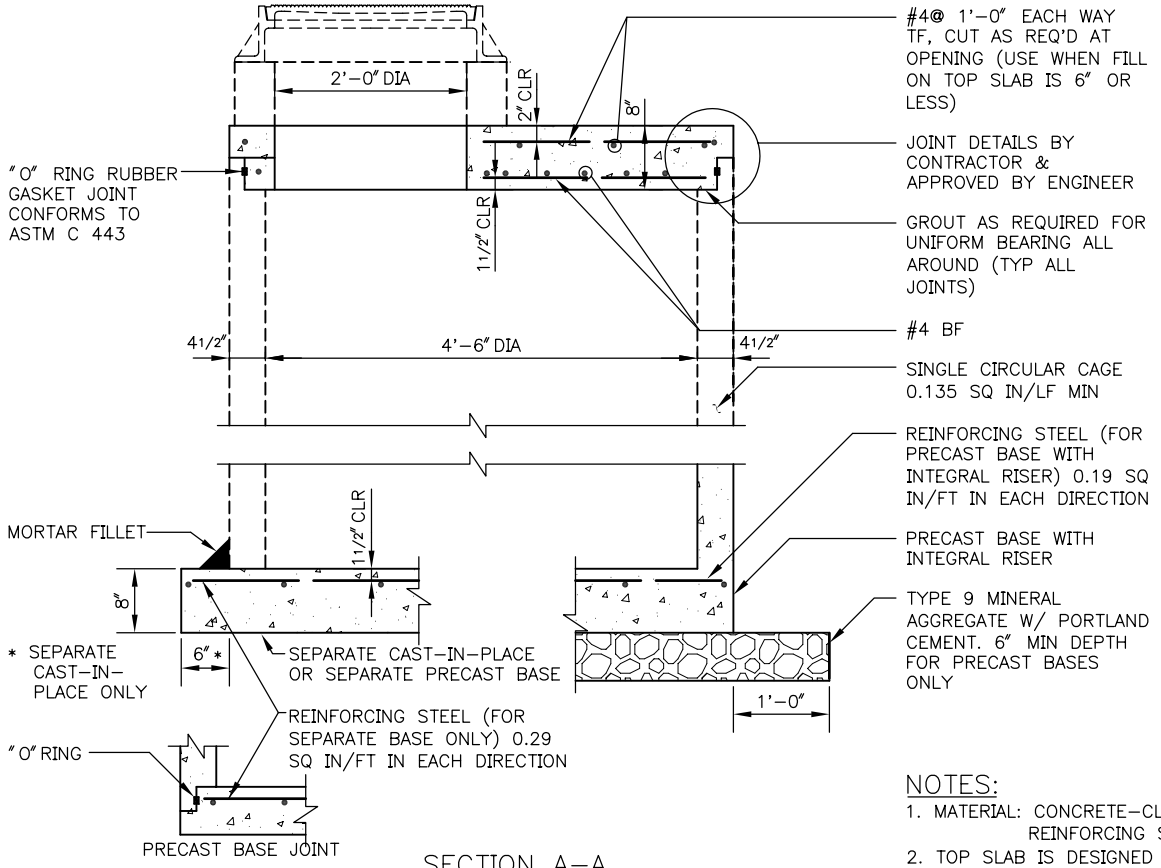

SECTION A-A

NOTES:

1. MATERIAL: CONCRETE-CLASS AX
   REINFORCING STEEL-ASTM A 615 GR 60
2. TOP SLAB IS DESIGNED FOR 3'-0" MAX COVER
   BASE IS DESIGNED FOR 20'-0" MAX COVER
3. HEIGHT 8'-0" TO 12'-0":
   MIN. REQUIRED SOIL BEARING = 3300 LBS/SQ FT
4. HEIGHT 12'-0" TO 20'-0":
   MIN. REQUIRED SOIL BEARING = 3800 LBS/SQ FT

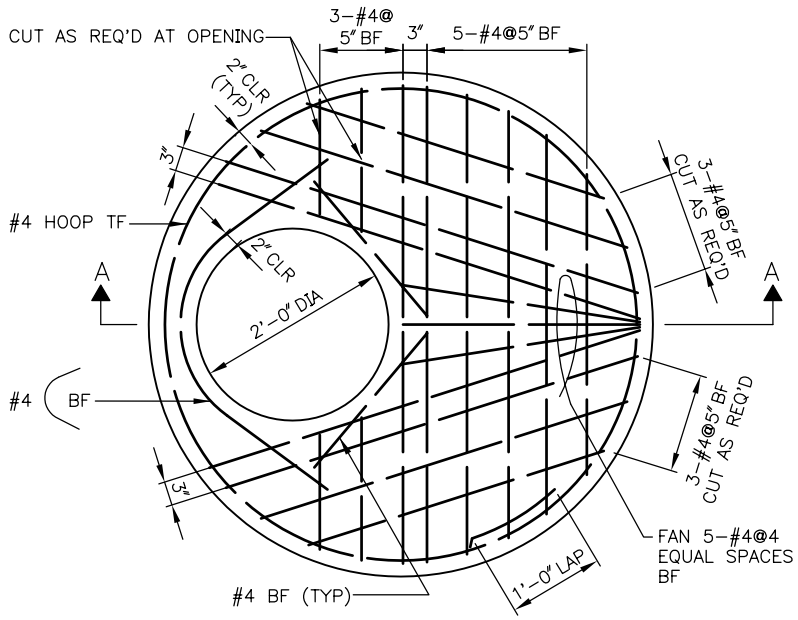

TYPE 201 MH-TOP SLAB

REF STD SPEC SEC 7-05

City of Seattle	NOT TO SCALE	TYPE 201 MANHOLE TOP & BOTTOM SLABS

REV DATE: 2003

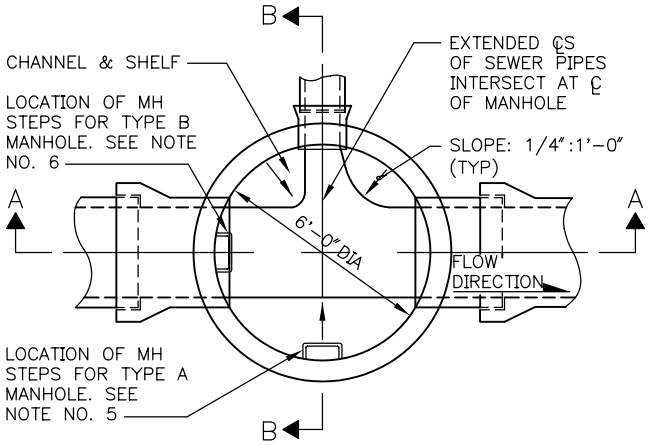

PLAN VIEW
(TOP REMOVED)

NOTES:

1. MH 202 TYPE A DESIGNATES A MANHOLE TOP SLAB WITH A 4'-0" DIA ACCESS.
2. MH 202 TYPE B DESIGNATES A MANHOLE TOP SLAB WITH A 2'-0" DIA ACCESS.
3. TOP SLAB AND BASE SECTION DETAILS, SEE STANDARD PLAN NO 202b.
4. MAXIMUM DIMENSION FROM OUTSIDE MANHOLE WALL TO THE FIRST PIPE JOINT. THE GREATER OF 1/2 INSIDE PIPE DIAMETER OR 1'-0".
5. FOR TYPE A MANHOLE, LOCATE MANHOLE STEPS ON THE SIDE PERPENDICULAR TO THE DIRECTION OF THE FLOW IN THE CHANNEL.
6. FOR TYPE B MANHOLE, LOCATE MANHOLE STEPS OPPOSITE TO THE DOWNSTREAM OPENING.
7. TOTAL HEIGHT OF AN EXTENSION, MANHOLE FRAME & COVER AND LEVELING BRICKS SHALL NOT EXCEED 2'-2".
8. MANHOLE BASE SECTIONS SHOWN IN SECTION A-A AND SECTION B-B ARE TYPICAL FOR TYPE A AND TYPE B MANHOLES.
9. THE MAXIMUM HOLE SIZE SHALL BE THE OUTSIDE DIAMETER OF THE PIPE PLUS THE MANHOLE WALL THICKNESS. THE MINIMUM HOLE SIZE SHALL BE THE OUTSIDE DIAMETER OF THE PIPE PLUS 4 INCHES. MINIMUM DISTANCE BETWEEN HOLES IS 1'-0" INCHES.
10. PRECAST MANHOLE COMPONENTS SHALL CONFORM TO ASTM C 478. JOINTS BETWEEN PRECAST COMPONENTS SHALL BE RUBBER GASKETED CONFORMING TO ASTM C 443.

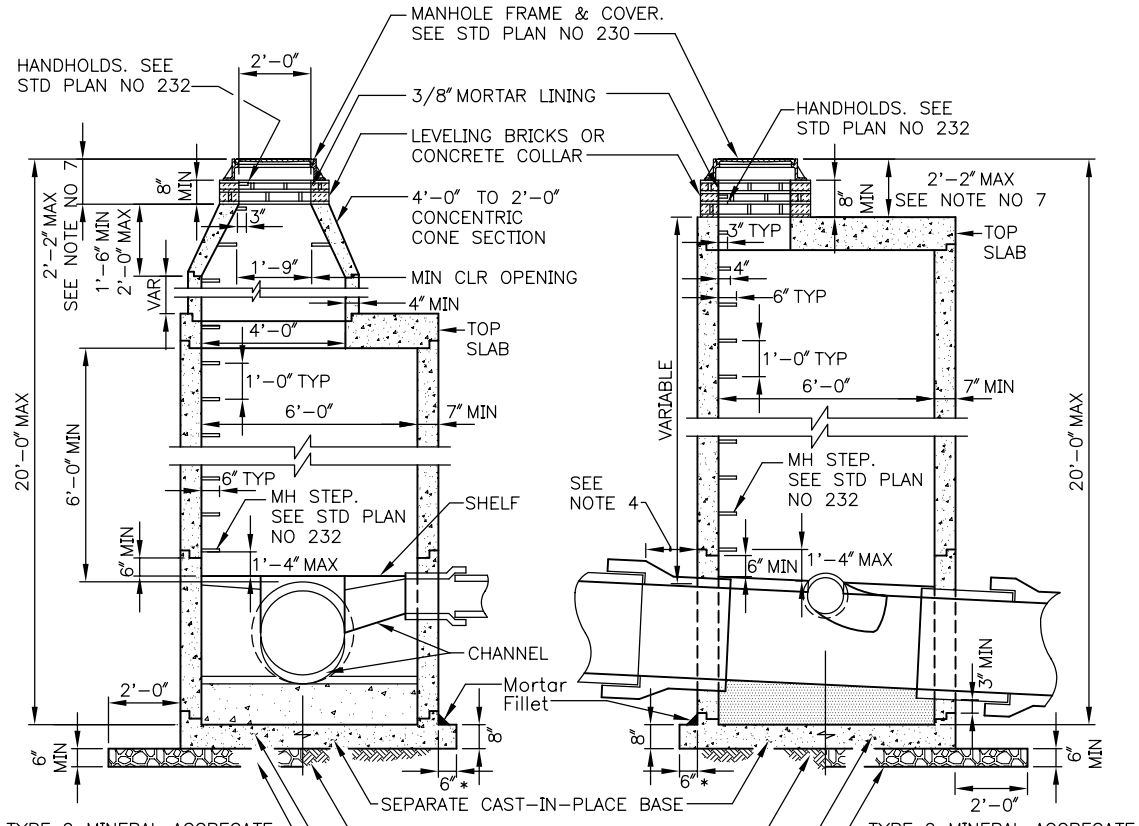

TYPE A
SECTION B-B

TYPE B
SECTION A-A

REF STD SPEC SEC 7-05

City of Seattle	NOT TO SCALE	TYPE 202 MANHOLE

REV DATE: 2003

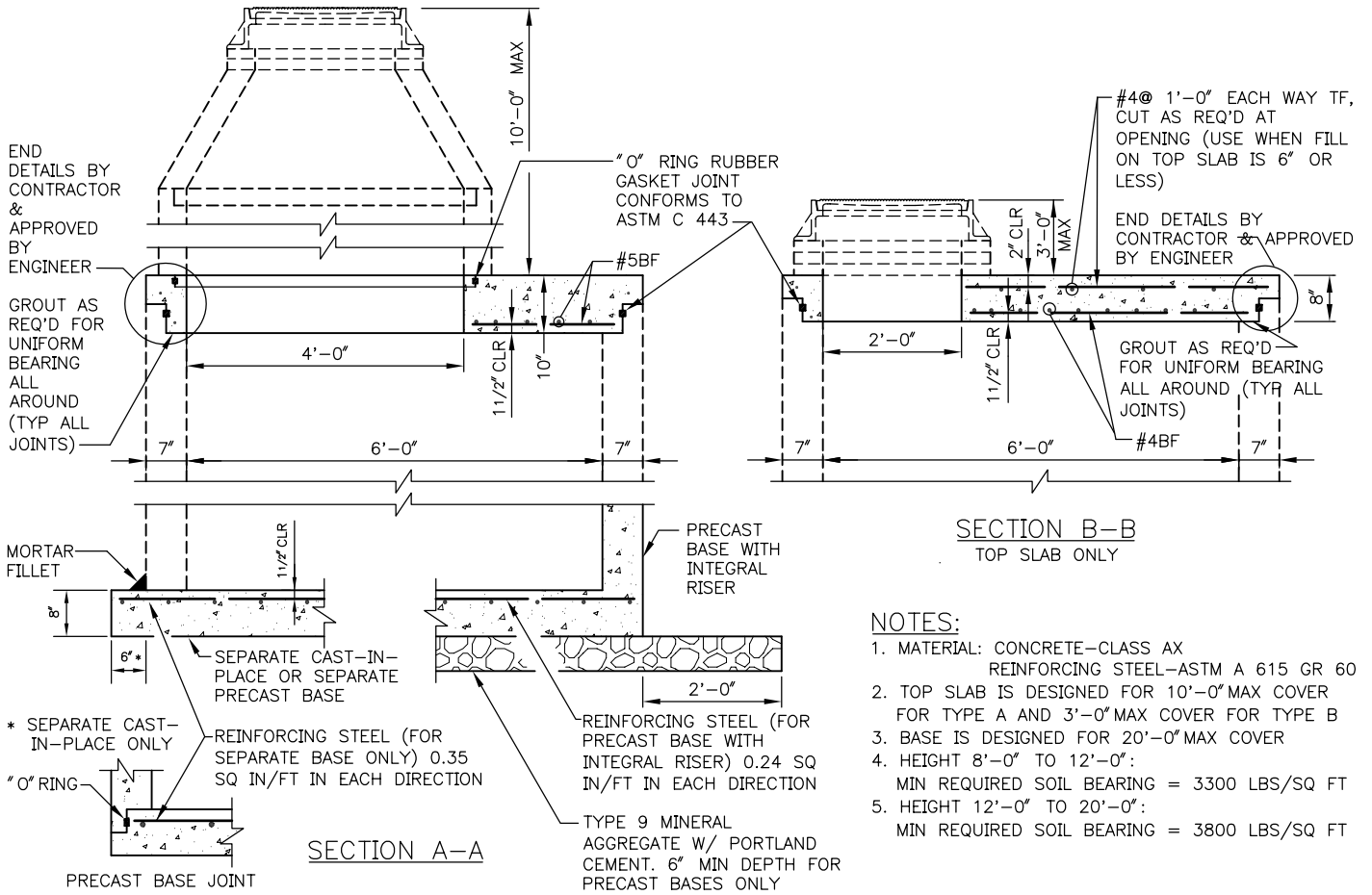

NOTES:

1. MATERIAL: CONCRETE-CLASS AX
   REINFORCING STEEL-ASTM A 615 GR 60
2. TOP SLAB IS DESIGNED FOR 10'-0" MAX COVER FOR TYPE A AND 3'-0" MAX COVER FOR TYPE B
3. BASE IS DESIGNED FOR 20'-0" MAX COVER
4. HEIGHT 8'-0" TO 12'-0":
   MIN REQUIRED SOIL BEARING = 3300 LBS/SQ FT
5. HEIGHT 12'-0" TO 20'-0":
   MIN REQUIRED SOIL BEARING = 3800 LBS/SQ FT

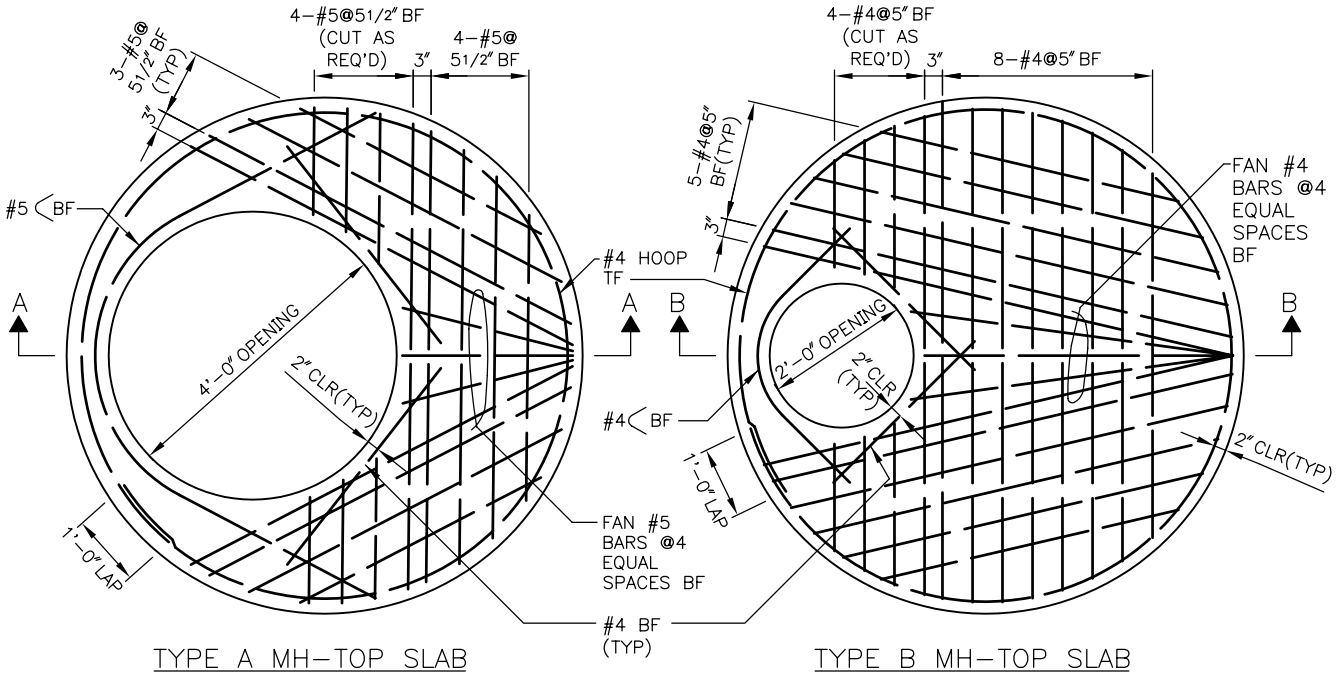

REF STD SPEC SEC 7-05

City of Seattle	NOT TO SCALE	TYPE 202 MANHOLE TOP & BOTTOM SLABS

REV DATE: 2003

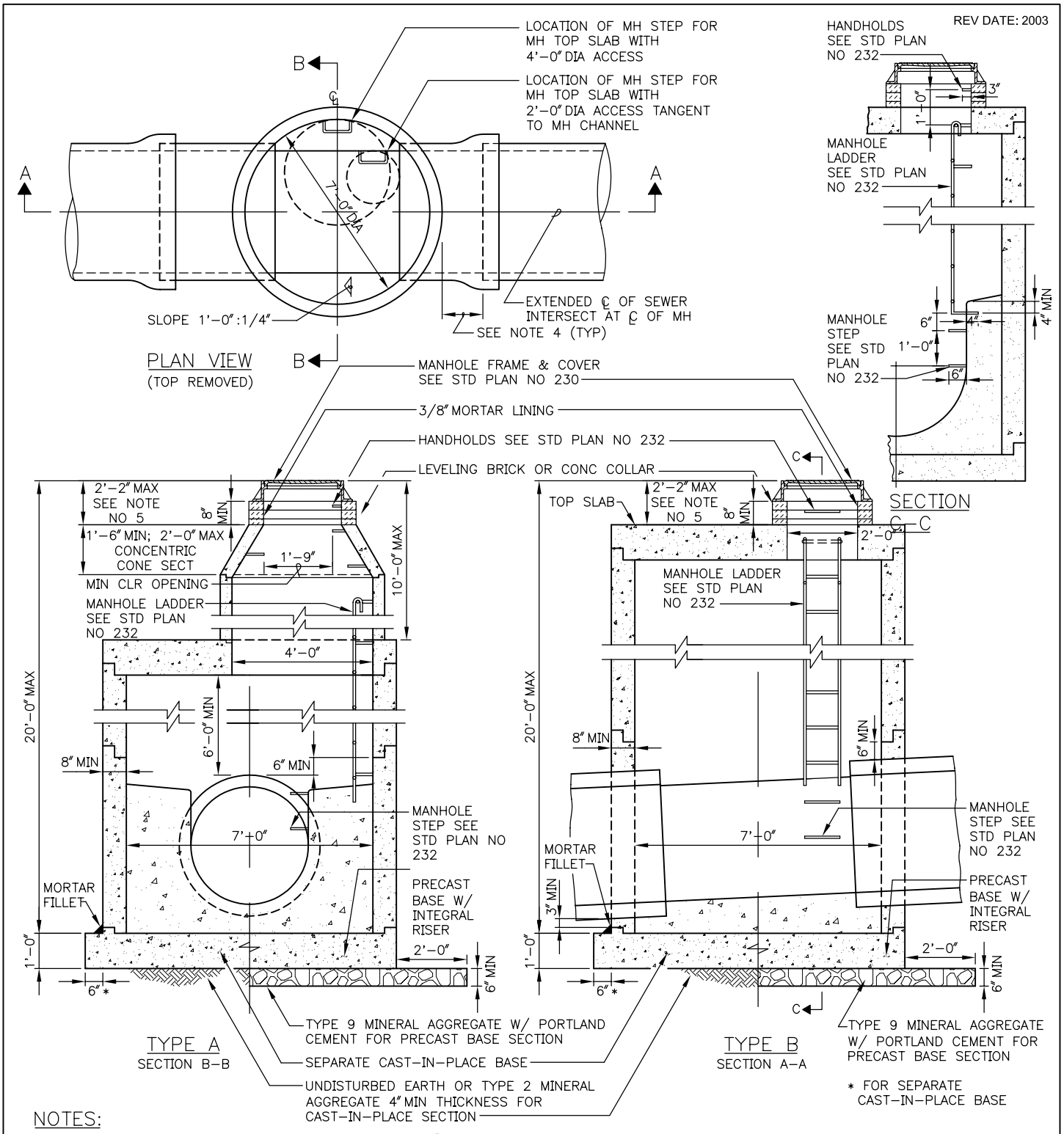

NOTES:

1. TYPE A MH DESIGNATES A MH TOP SLAB WITH A 4'-0" DIA ACCESS.
2. TYPE B MH DESIGNATES A MH TOP SLAB WITH A 2'-0" DIA ACCESS.
3. TOP SLAB AND BASE SECTION DETAILS, SEE STD PLAN NO 203b.
4. MAX DIMENSION FROM OUTSIDE MH WALL TO THE FIRST PIPE FLEX JOINT. THE GREATER OF 1/2 INSIDE PIPE DIAMETER OR 1'-0".
5. TOTAL HEIGHT OF FRAME EXTENSIONS, MH FRAME AND COVER, AND LEVELING BRICKS SHALL NOT EXCEED 2'-2".
6. MH BASE SECTIONS SHOWN IN SECTION A-A AND SECTION B-B ARE TYPICAL FOR TYPE A AND TYPE B MHS.
7. MAX HOLE SIZE IS EQUAL TO THE OUTSIDE DIAMETER OF THE PIPE PLUS THE MH WALL THICKNESS. MIN DISTANCE BETWEEN HOLES IS 1'-0".
8. PRECAST MH COMPONENTS SHALL CONFORM TO ASTM C 478. JOINTS BETWEEN PRECAST COMPONENTS SHALL BE RUBBER GASKETED CONFORMING TO ASTM C 443.

REF STD SPEC SEC 7-05

City of Seattle	NOT TO SCALE	TYPE 203 MANHOLE

REV DATE: 2003

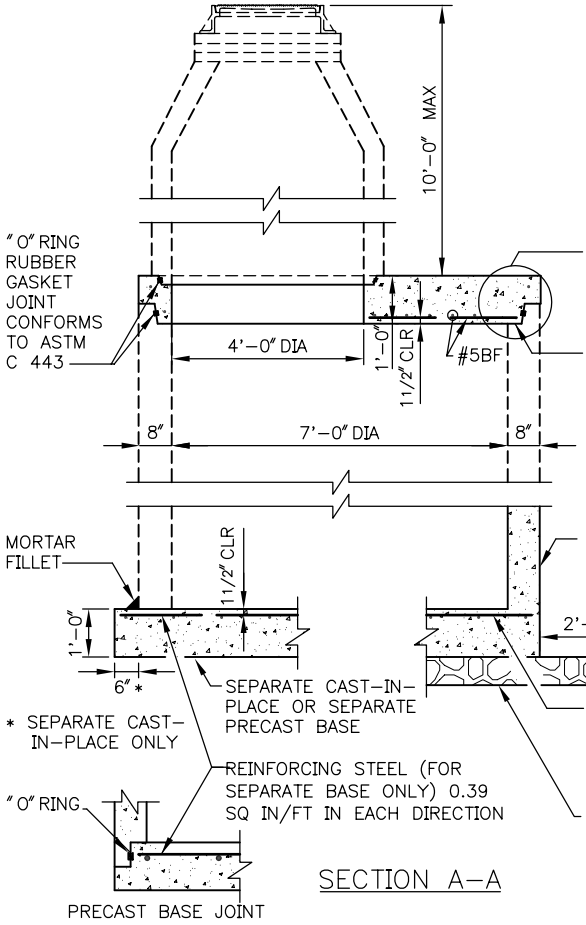

SECTION A-A

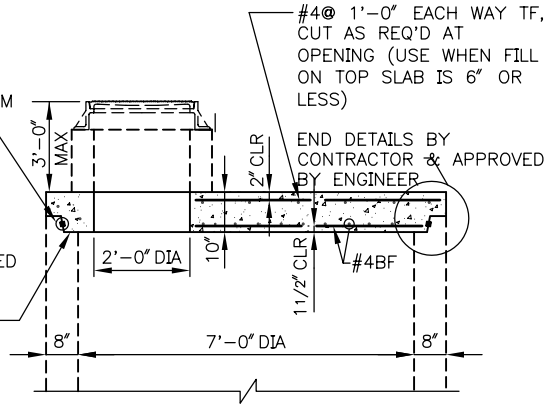

SECTION B-B

TOP SLAB ONLY

NOTES:

1. MATERIAL: CONCRETE-CLASS AX
   REINFORCING STEEL-ASTM A 615 GR 60
2. TOP SLAB IS DESIGNED FOR 10'-0" MAX COVER FOR TYPE A AND 3'-0" MAX COVER FOR TYPE B
3. BASE IS DESIGNED FOR 20'-0" MAX COVER
4. HEIGHT 8'-0" TO 12'-0":
   MIN REQUIRED SOIL BEARING = 3300 LBS/SQ FT
5. HEIGHT 12'-0" TO 20'-0":
   MIN REQUIRED SOIL BEARING = 3800 LBS/SQ FT

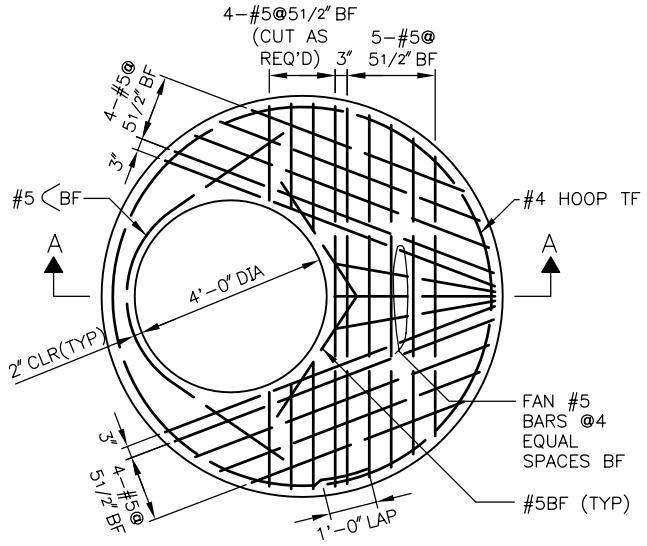

TYPE A MH-TOP SLAB

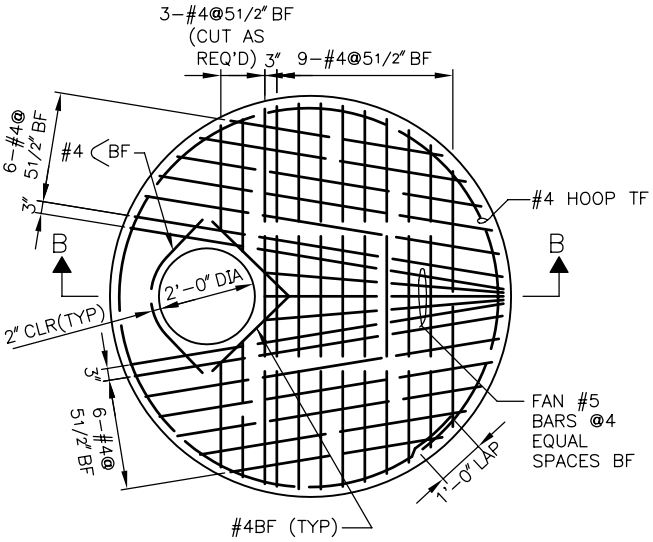

TYPE B MH-TOP SLAB

REF STD SPEC SEC 7-05

City of Seattle	NOT TO SCALE	TYPE 203 MANHOLE TOP & BOTTOM SLABS

REV DATE: 2003

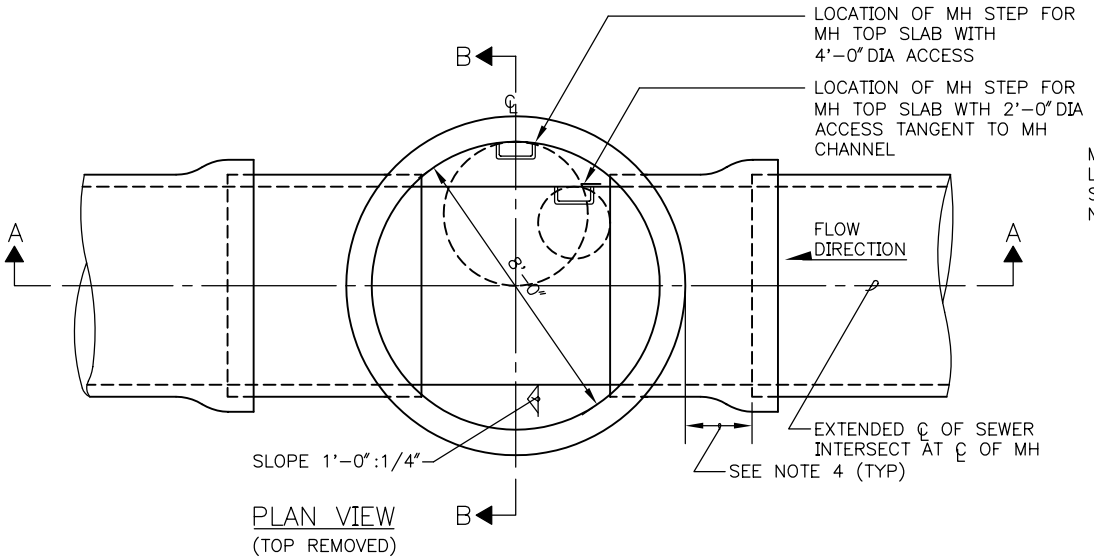

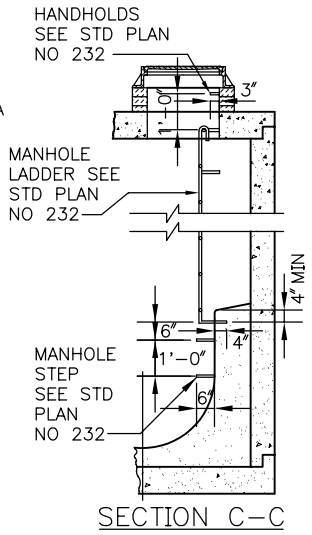

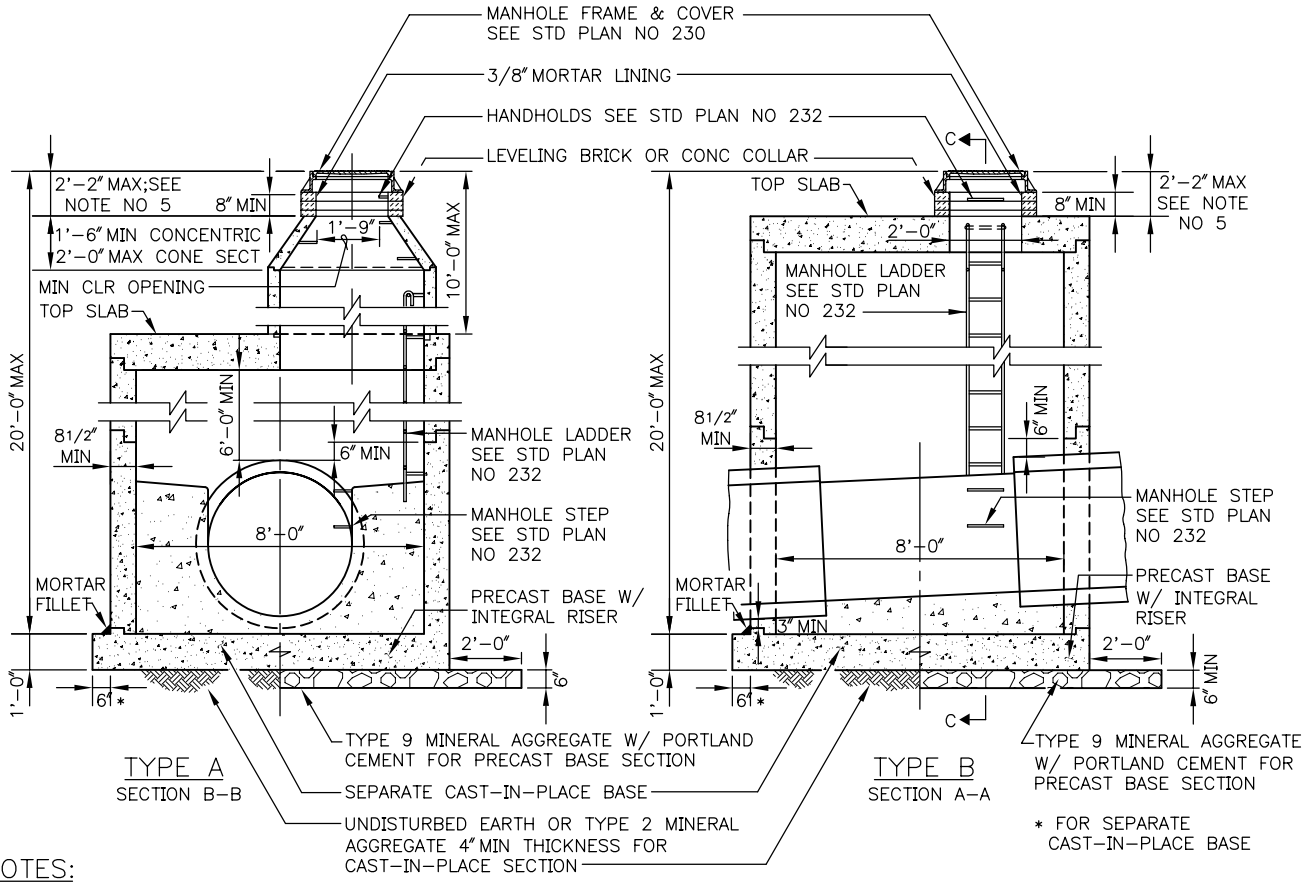

NOTES:

1. TYPE A MH DESIGNATES A MH TOP SLAB WITH A 4'-0" DIA ACCESS.
2. TYPE B MH DESIGNATES A MH TOP SLAB WITH A 2'-0" DIA ACCESS.
3. TOP SLAB AND BASE SECTION DETAILS, SEE STD PLAN NO 204.B.
4. MAX DIMENSION FROM OUTSIDE MH WALL TO THE FIRST PIPE JOINT. THE GREATER OF 1/2 INSIDE PIPE DIAMETER OR 1'-0".
5. TOTAL HEIGHT OF FRAME EXTENSIONS, MH FRAME AND COVER, AND LEVELING BRICKS SHALL NOT EXCEED 2'-2".
6. MH BASE SECTIONS SHOWN IN SECTION A-A AND SECTION B-B ARE TYPICAL FOR TYPE A AND TYPE B MHS.
7. MAX HOLE SIZE IS EQUAL TO THE OUTSIDE DIAMETER OF THE PIPE PLUS THE MH WALL THICKNESS. MIN DISTANCE BETWEEN HOLES IS 1'-0".

REF STD SPEC SEC 7-05

City of Seattle	NOT TO SCALE	TYPE 204 MANHOLE

REV DATE: 2003

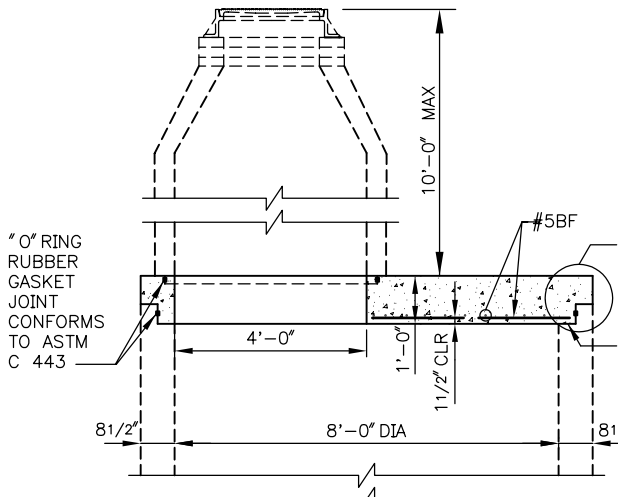

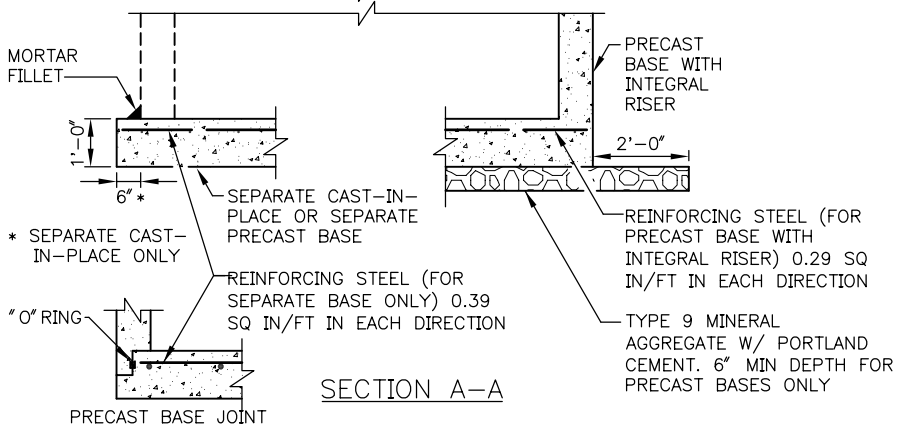

SECTION A–A

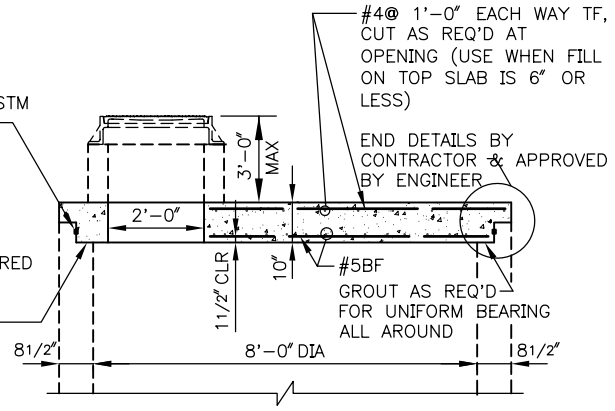

SECTION B–B
TOP SLAB ONLY

NOTES:

1. MATERIAL: CONCRETE–CLASS AX
   REINFORCING STEEL–ASTM A 615 GR 60
2. TOP SLAB IS DESIGNED FOR 10'-0" MAX COVER FOR TYPE A AND 3'-0" MAX COVER FOR TYPE B
3. BASE IS DESIGNED FOR 20'-0" MAX COVER
4. HEIGHT 8'-0" TO 12'-0":
   MIN REQUIRED SOIL BEARING = 3300 LBS/SQ FT
5. HEIGHT 12'-0" TO 20'-0":
   MIN REQUIRED SOIL BEARING = 3800 LBS/SQ FT

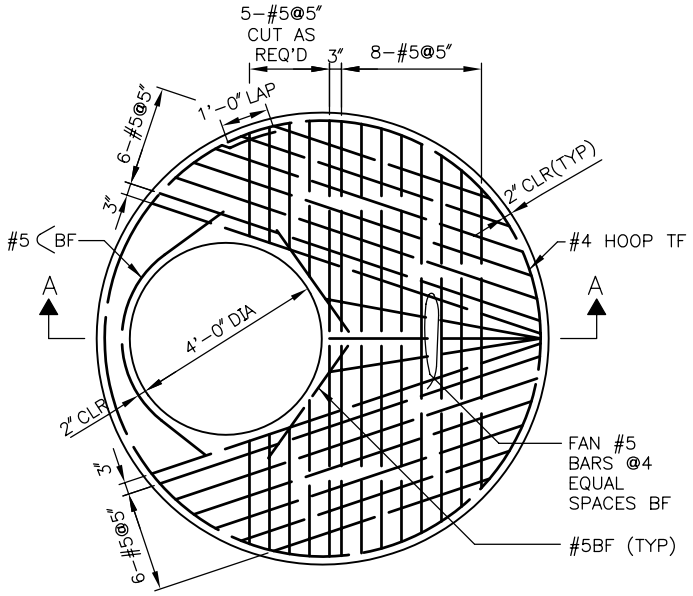

TYPE A MH–TOP SLAB

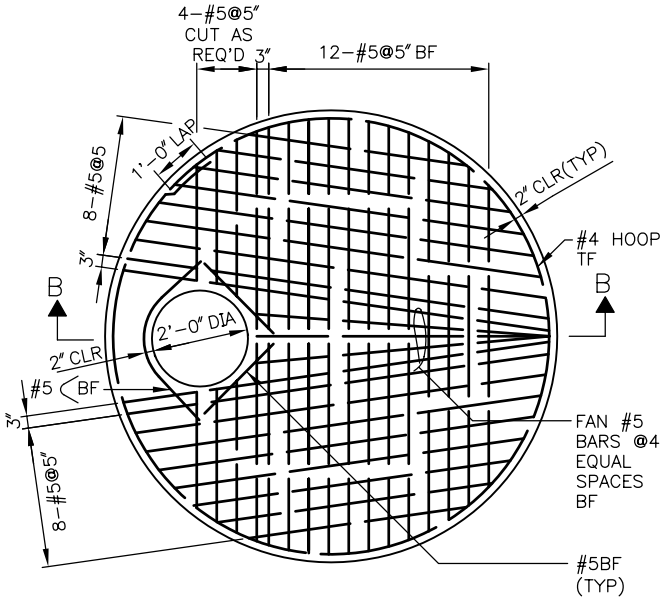

TYPE B MH–TOP SLAB

REF STD SPEC SEC 7-05

City of Seattle	NOT TO SCALE	TYPE 204 MANHOLE TOP & BOTTOM SLABS

REV DATE: 2003

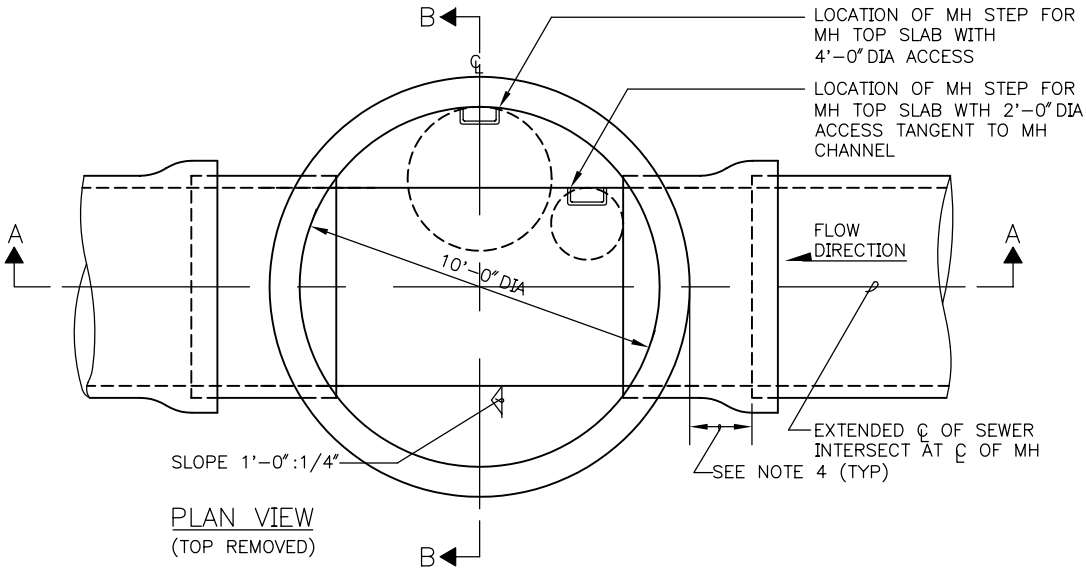

PLAN VIEW
(TOP REMOVED)

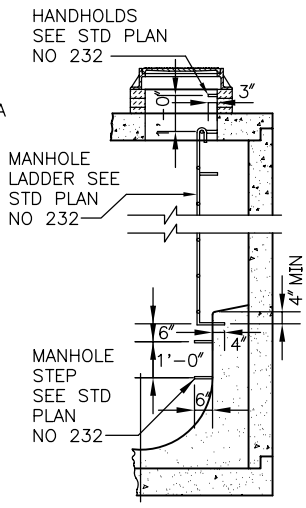

SECTION C-C

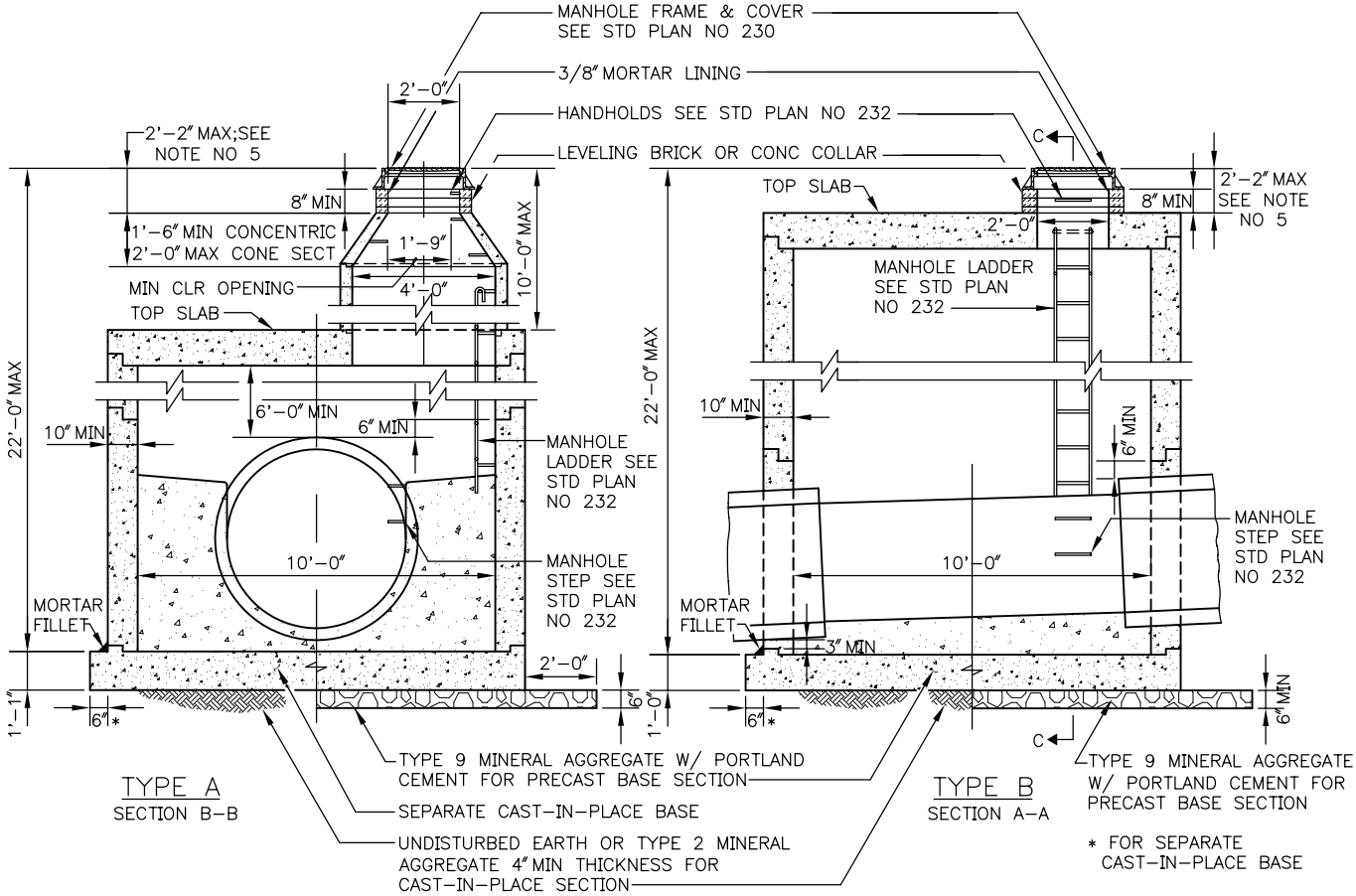

TYPE A
SECTION B-B

TYPE B
SECTION A-A

NOTES:

1. TYPE A MH DESIGNATES A MH TOP SLAB WITH A 4'-0" DIA ACCESS.
2. TYPE B MH DESIGNATES A MH TOP SLAB WITH A 2'-0" DIA ACCESS.
3. TOP SLAB AND BASE SECTION DETAILS, SEE STD PLAN NO 205b.
4. MAX DIMENSION FROM OUTSIDE MH WALL TO THE FIRST PIPE JOINT. THE GREATER OF 1/2 INSIDE PIPE DIAMETER OR 1'-0".
5. TOTAL HEIGHT OF FRAME EXTENSIONS, MH FRAME AND COVER, AND LEVELING BRICKS SHALL NOT EXCEED 2'-2".
6. MH BASE SECTIONS SHOWN IN SECTION A-A AND SECTION B-B ARE TYPICAL FOR TYPE A AND TYPE B MHS.
7. MAX HOLE SIZE IS EQUAL TO THE OUTSIDE DIAMETER OF THE PIPE PLUS THE MH WALL THICKNESS. MIN DISTANCE BETWEEN HOLES IS 1'-0".

REF STD SPEC SEC 7-05

City of Seattle	NOT TO SCALE	TYPE 205 MANHOLE

REV DATE: 2003

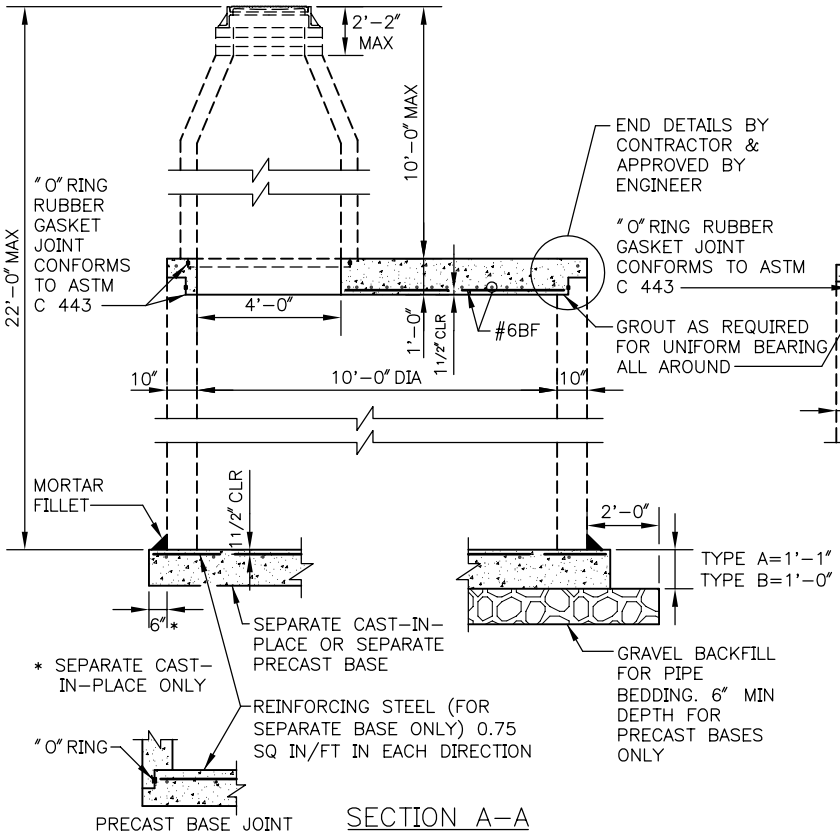

SECTION A-A

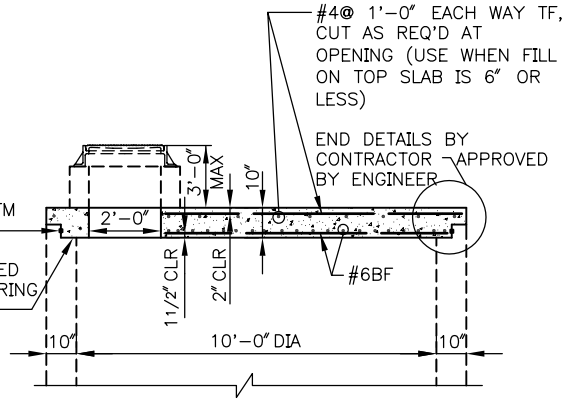

SECTION B-B
TOP SLAB ONLY

NOTES:

1. MATERIAL: CONCRETE-CLASS AX
   REINFORCING STEEL-ASTM A 615 GR 60
2. 10'-0" MAX FILL ON TOP SLAB - TYPE A
3. 3'-0" MAX FILL ON TOP SLAB - TYPE B
4. HEIGHT 8'-0" TO 12'-0":
   MIN REQUIRED SOIL BEARING = 3300 LBS/SQ FT
5. HEIGHT 12'-0" TO 22'-0":
   MIN REQUIRED SOIL BEARING = 3800 LBS/SQ FT

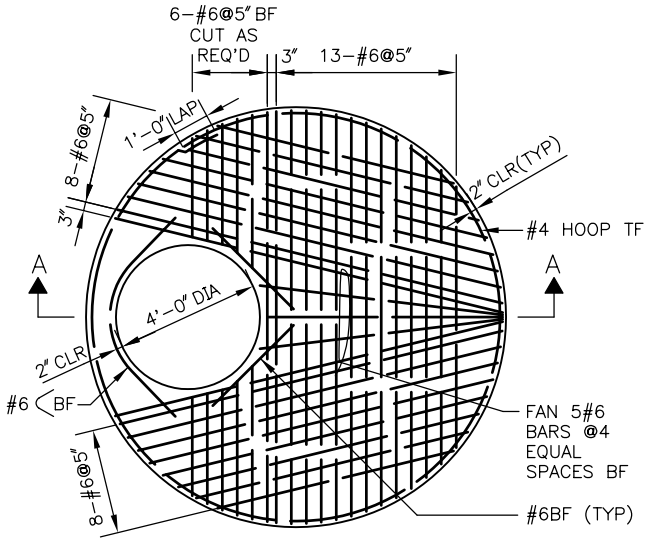

TYPE A MH-TOP SLAB

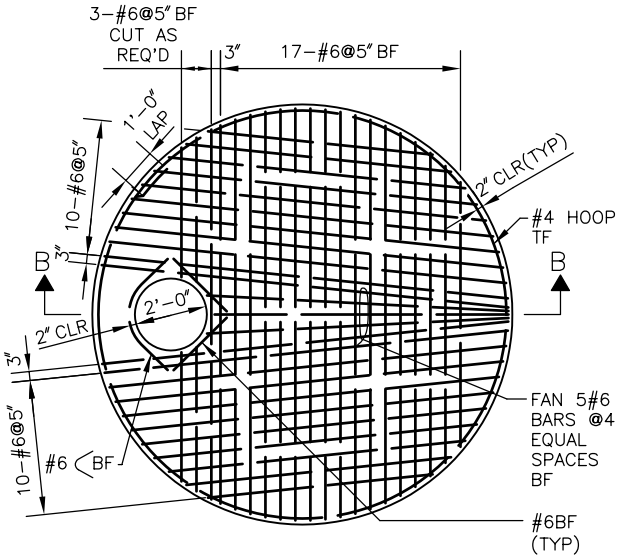

TYPE B MH-TOP SLAB

REF STD SPEC SEC 7-05

City of Seattle	NOT TO SCALE	TYPE 205 MANHOLE TOP & BOTTOM SLABS

REV DATE: 2003

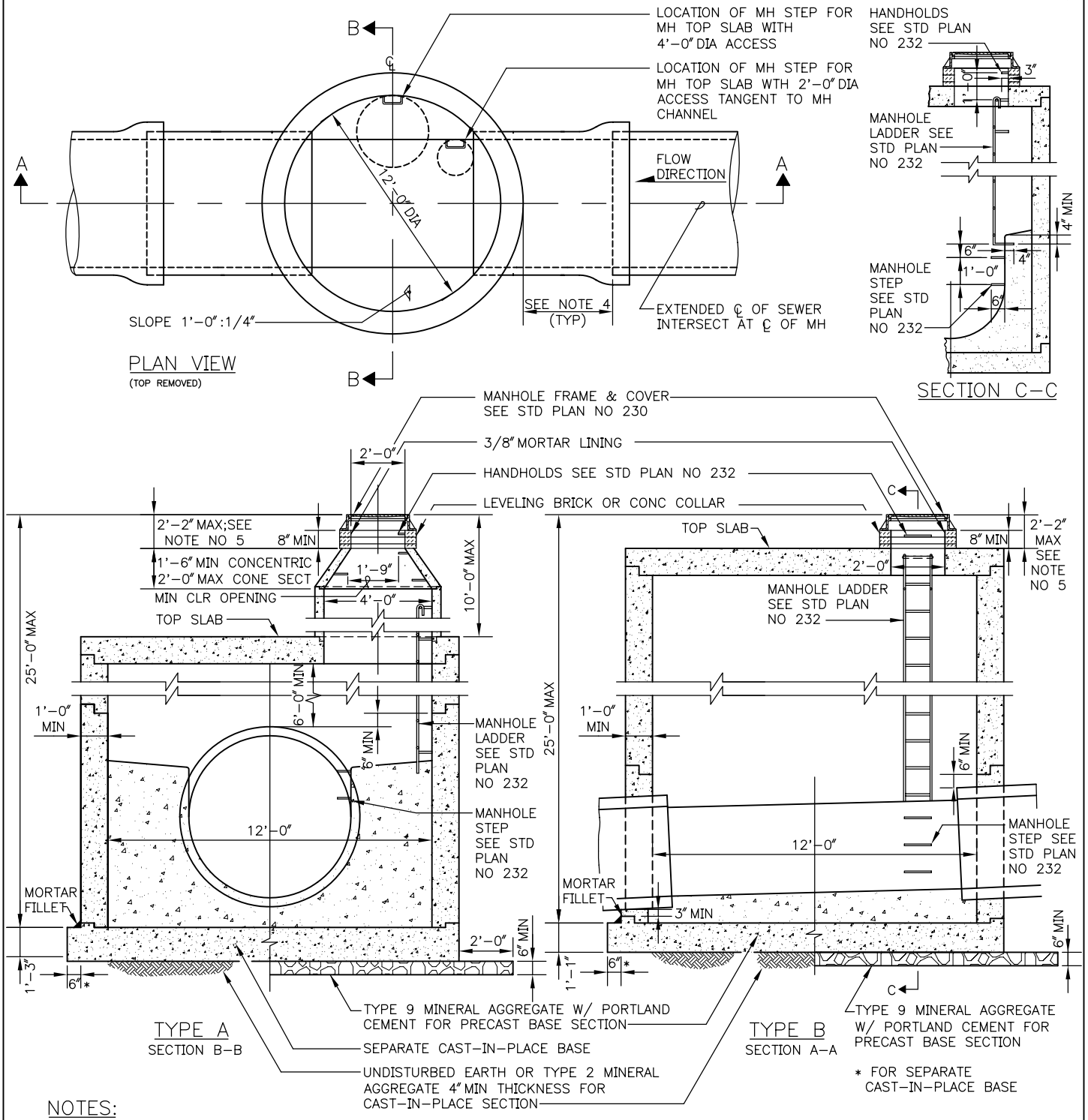

NOTES:

1. TYPE A MH DESIGNATES A MH TOP SLAB WITH A 4'-0" DIA ACCESS.
2. TYPE B MH DESIGNATES A MH TOP SLAB WITH A 2'-0" DIA ACCESS.
3. TOP SLAB AND BASE SECTION DETAILS, SEE STD PLAN NO 206b.
4. MAX DIMENSION FROM OUTSIDE MH WALL TO THE FIRST PIPE JOINT, THE GREATER OF 1/2 INSIDE PIPE DIAMETER OR 1'-0" EXCEPT PVC AND CMP.
5. TOTAL HEIGHT OF FRAME EXTENSIONS, MH FRAME AND COVER, AND LEVELING BRICKS SHALL NOT EXCEED 2'-2".
6. MH BASE SECTIONS SHOWN IN SECTION A-A AND SECTION B-B ARE TYPICAL FOR TYPE A AND TYPE B MHS.
7. MAX HOLE SIZE IS EQUAL TO THE OUTSIDE DIAMETER OF THE PIPE PLUS THE MH WALL THICKNESS. MIN DISTANCE BETWEEN HOLES IS 1'-0".

REF STD SPEC SEC 7-05

City of Seattle	NOT TO SCALE	TYPE 206 MANHOLE

REV DATE: 2003

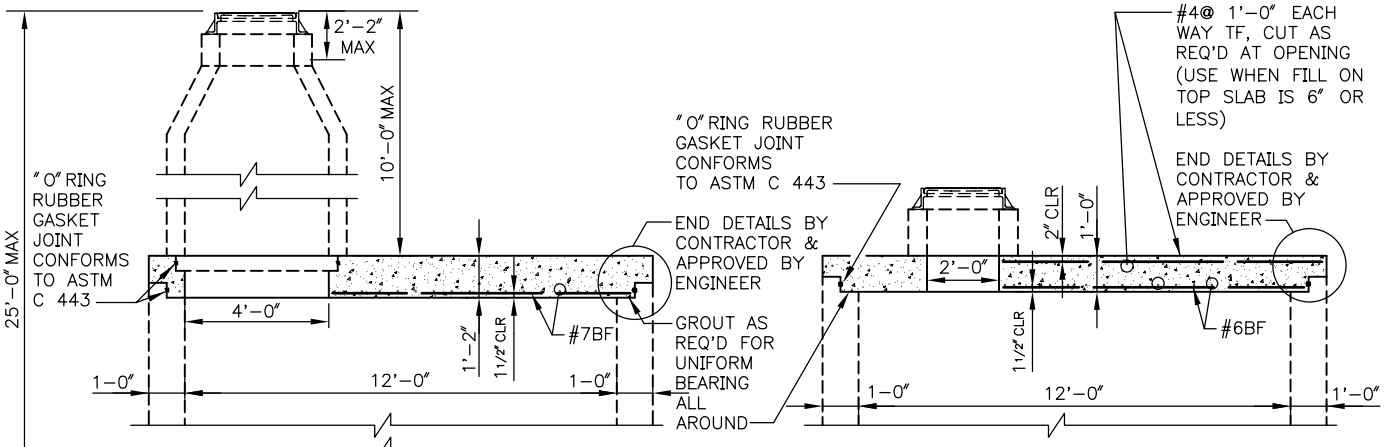

SECTION B–B
TOP SLAB ONLY

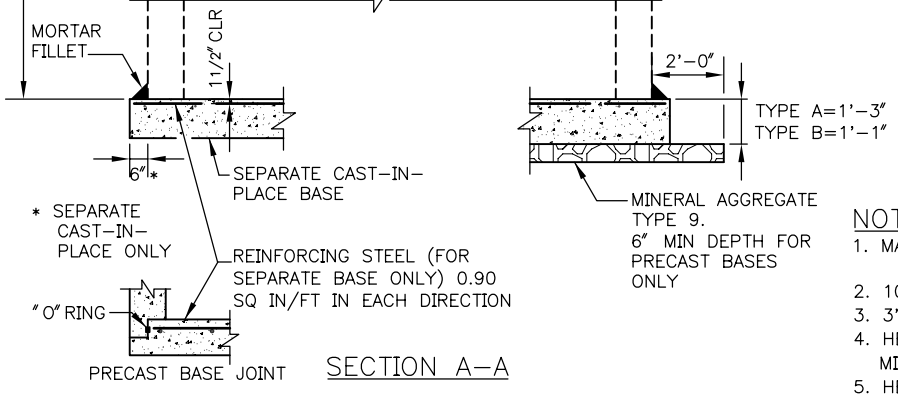

SECTION A–A

NOTES:

1. MATERIAL: CONCRETE–CLASS AX
   REINFORCING STEEL–ASTM A 615 GR 60
2. 10'–0" MAX FILL ON TOP SLAB – TYPE A
3. 3'–0" MAX FILL ON TOP SLAB – TYPE B
4. HEIGHT 8'–0" TO 12'–0":
   MIN REQUIRED SOIL BEARING = 3300 LBS/SQ FT
5. HEIGHT 12'–0" TO 25'–0":
   MIN REQUIRED SOIL BEARING = 3800 LBS/SQ FT

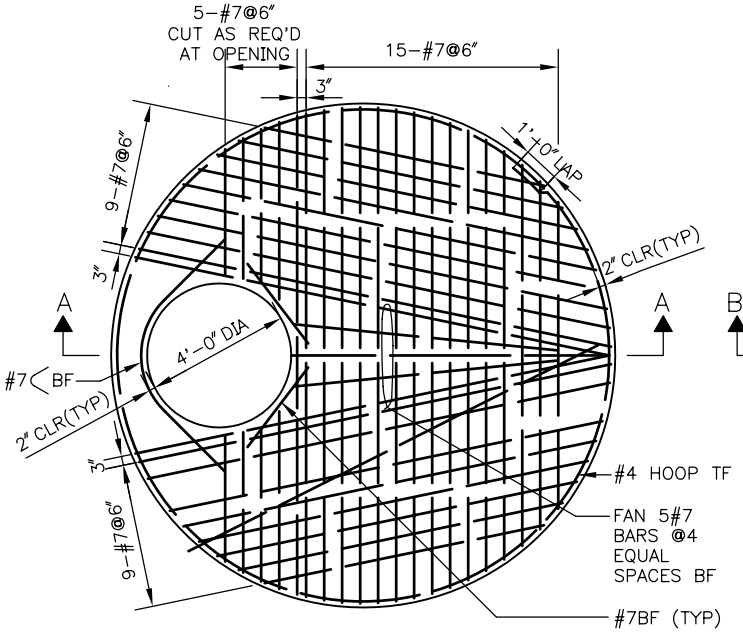

TYPE A MH–TOP SLAB

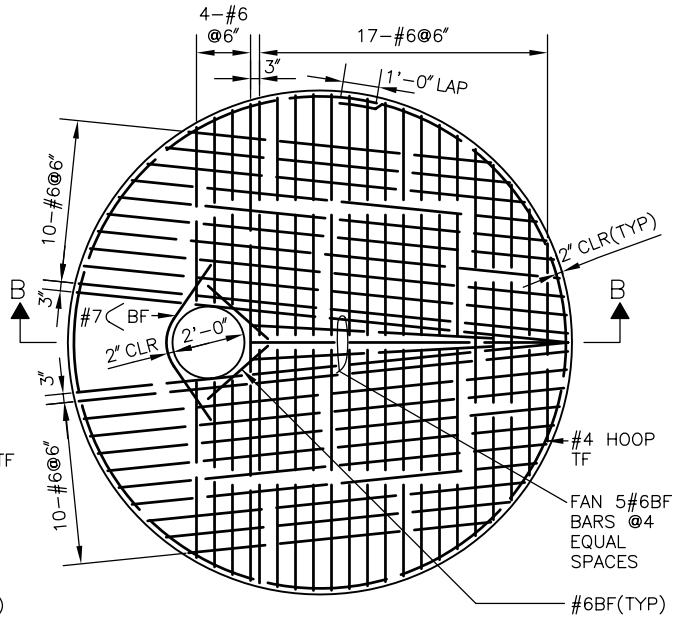

TYPE B MH–TOP SLAB

REF STD SPEC SEC 7-05

City of Seattle	NOT TO SCALE	TYPE 206 MANHOLE TOP & BOTTOM SLABS

REV DATE: 2003

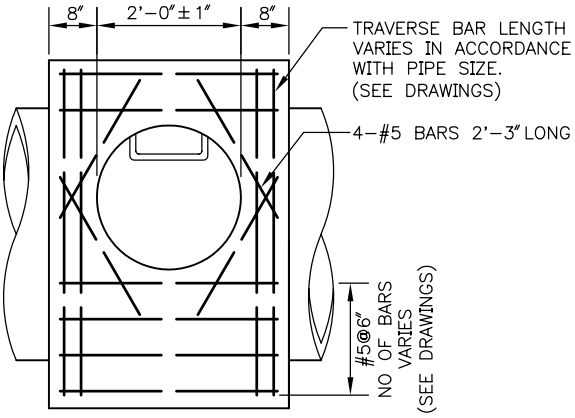

SECTION B–B

NOTE:
REINFORCING STEEL SHALL BE DEFORMED BARS CONFORMING TO ASTM A 615 GR 60 AND SHALL HAVE A MIN COVER OF 2″

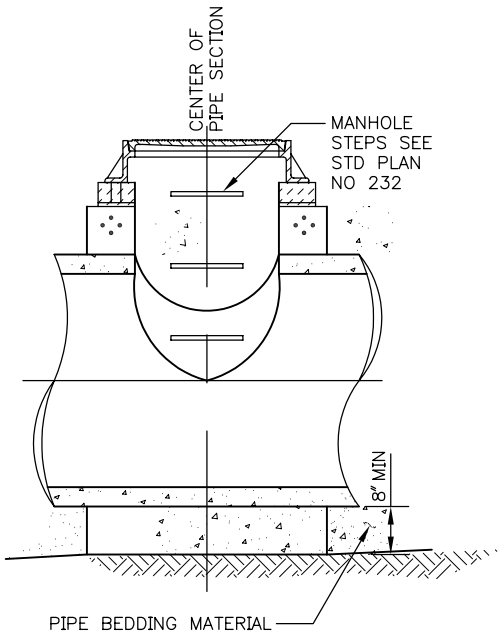

SECTION A–A

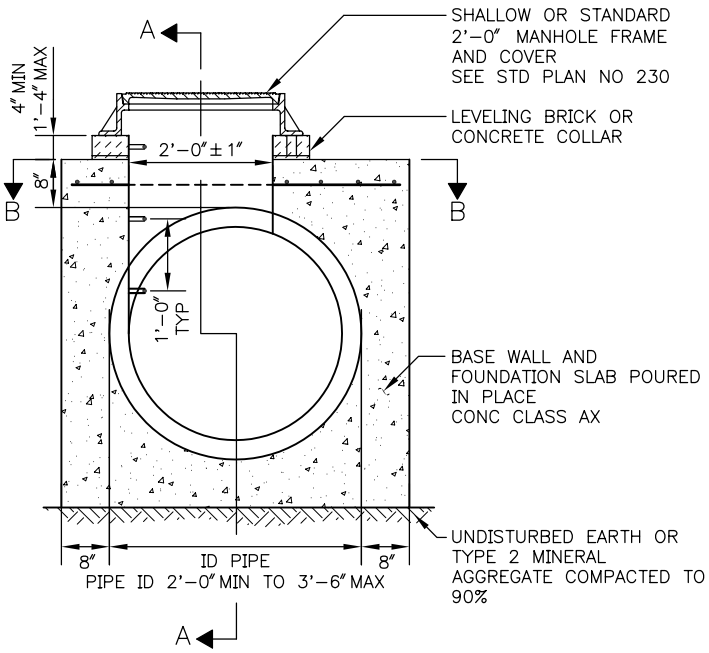

SECTION THRU ℄

REF STD SPEC SEC 7-05

City of Seattle	NOT TO SCALE	TYPE 207 MANHOLE

REV DATE: 2003

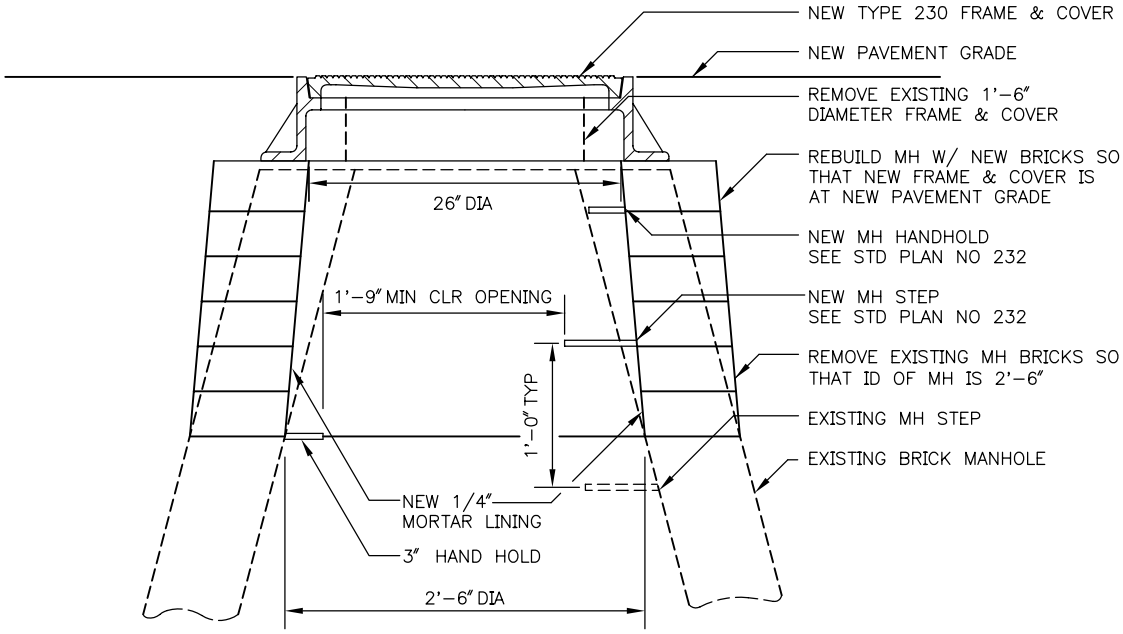

NOTES:

1. NEW MANHOLE STEPS AND HANDHOLDS SHALL BE INSTALLED AND LOCATED 1'–0" OC FROM THE FIRST EXISTING STEP IN THE MANHOLE AND SHALL MATCH THE EXISTING TYPE OF STEP. ANY SUBSTITUTIONS SHALL BE APPROVED BY THE ENGINEER. A MINIMUM 1'–9" CLEAR OPENING SHALL BE MAINTAINED.
2. FOR 7" RIGID PAVEMENT, THE RING AND COVER SHALL BE CONSTRUCTED TO THE FINISHED GRADE OF THE PAVEMENT. REINFORCEMENT SHALL BE PLACED AROUND THE CASTING AT MID–POINT BETWEEN THE FINISH GRADE OF THE RIGID PAVEMENT AND THE TOP OF THE FLANGE. #4 REINFORCING BARS SHALL BE USED IN THE CONFIGURATION OF 2 SEPARATE SQUARES OFF–ROTATED 45 DEGREES FROM EACH OTHER AND GIVING A MINIMUM CLEARANCE OF 2" AT THE SHORTEST DISTANCE WITH THE FRAME.
3. FOR PAVEMENT DEPTH GREATER THAN 7", USE FRAME EXTENSION(S) AS SHOWN IN STANDARD PLAN NO 231 TO BRING THE COVER UP TO THE LEVEL OF THE FINISHED PAVEMENT WITHOUT EMBEDDING BOTTOM FLANGE OF THE CASTING IN THE PAVEMENT.

REF STD SPEC SEC 7-05

City of Seattle	NOT TO SCALE	REBUILD EXISTING BRICK MANHOLE

REV DATE: 2005

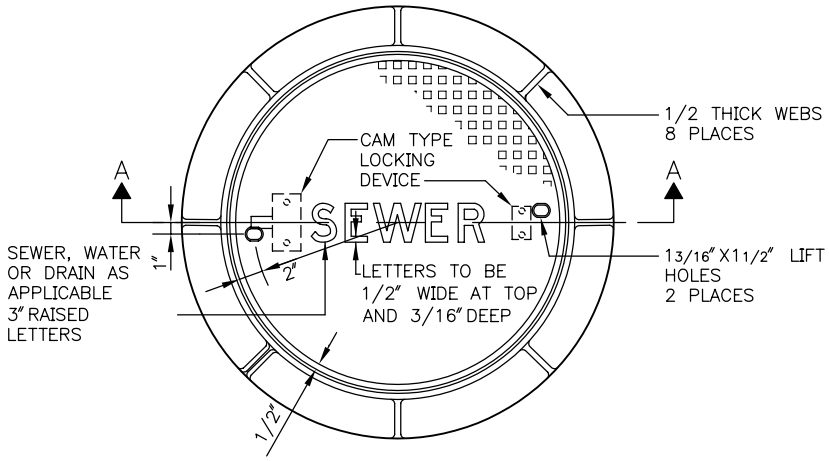

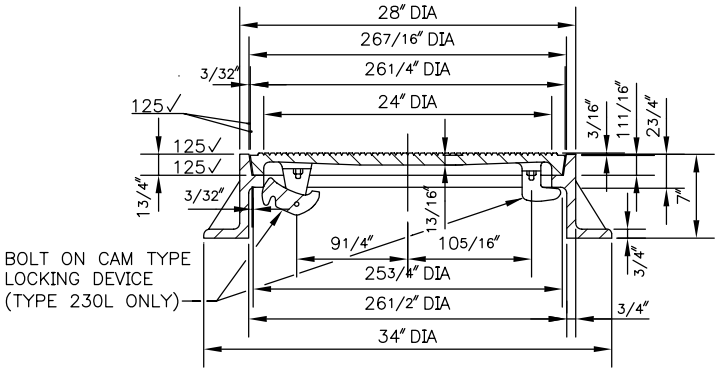

SECTION
A–A

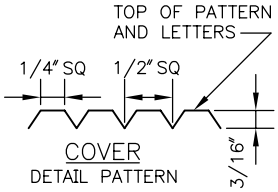

COVER
DETAIL PATTERN

NOTES:

1. DESIGNATE LOCKING COVER AS TYPE 230L FOR USE IN NON–VEHICULAR TRAFFIC AREAS.
2. FOR 7" RIGID PAVEMENT, THE FRAME AND COVER SHALL BE CONSTRUCTED TO THE FINISHED GRADE OF THE PAVEMENT. REINFORCEMENT SHALL BE PLACED AROUND THE CASTING AT MID–POINT BETWEEN THE FINISHED GRADE OF THE PAVEMENT AND THE TOP OF THE FLANGE. #4 REINFORCING BARS SHALL BE USED IN THE CONFIGURATION OF 2 SEPARATE SQUARES OFF–ROTATED 45 DEGREES FROM EACH OTHER AND GIVING A CLEARANCE OF 2 INCHES AT THE SHORTEST DISTANCE WITH THE FRAME
3. FOR RIGID PAVEMENT DEPTH GREATER THAN 7", USE FRAME EXTENSION(S) (STANDARD PLAN NO 231) TO BRING THE COVER UP TO THE LEVEL OF THE FINISHED PAVEMENT WITHOUT EMBEDDING THE BOTTOM FLANGE OF THE CASTING IN THE PAVEMENT
4. COVER THICKNESS IS MEASURED FROM THE BOTTOM OF THE PATTERN
5. REFER TO SECTION 5–05 FOR OTHER REQUIREMENTS FOR REINFORCING BARS
6. FRAMES SHALL BE MANUFACTURED FROM CAST IRON OR DUCTILE IRON
7. COVERS SHALL BE MANUFACTURED FROM DUCTILE IRON

REF STD SPEC SEC 7-05

City of Seattle	NOT TO SCALE	2'-0" DIAMETER FRAME & COVER

REV DATE: 2003

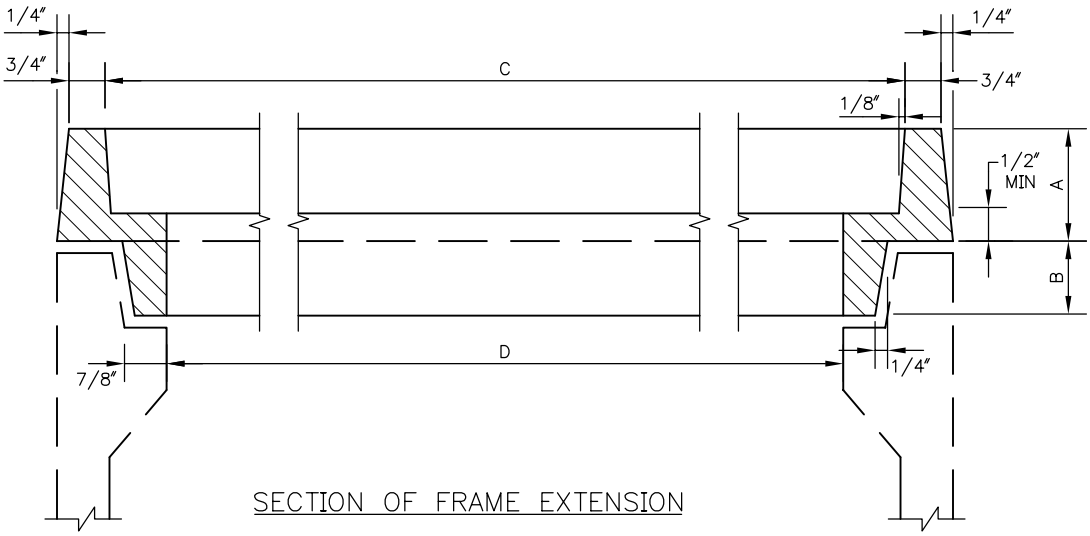

SECTION OF FRAME EXTENSION

NOTES:

1. DIMENSION "A" REFERS TO HEIGHT OF FRAME EXTENSION ABOVE MANHOLE FRAME
2. DIMENSIONS "B", "C" AND "D" SHALL MATCH THE MANHOLE FRAME AND COVER THAT THE FRAME EXTENSION TO BE USED ON
3. WHEN FRAME EXTENSIONS ARE USED ON A NEW MANHOLE FRAME AND COVER, THE FRAME EXTENSION SHALL BE PERMANENTLY ATTACHED TO THE MANHOLE FRAME AT THE FACTORY, NOT IN THE FIELD. APPROVAL OF ATTACHMENT METHOD IS REQUIRED
4. FRAME EXTENSIONS SHALL BE DUCTILE OR CAST IRON

REF STD SPEC SEC 7-20

City of Seattle	NOT TO SCALE	FRAME EXTENSIONS

REV DATE: 2005

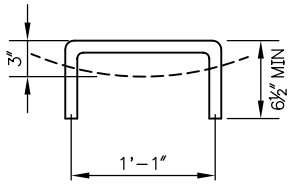

HANDHOLD

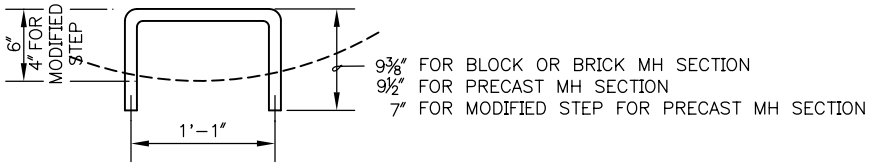

STEP

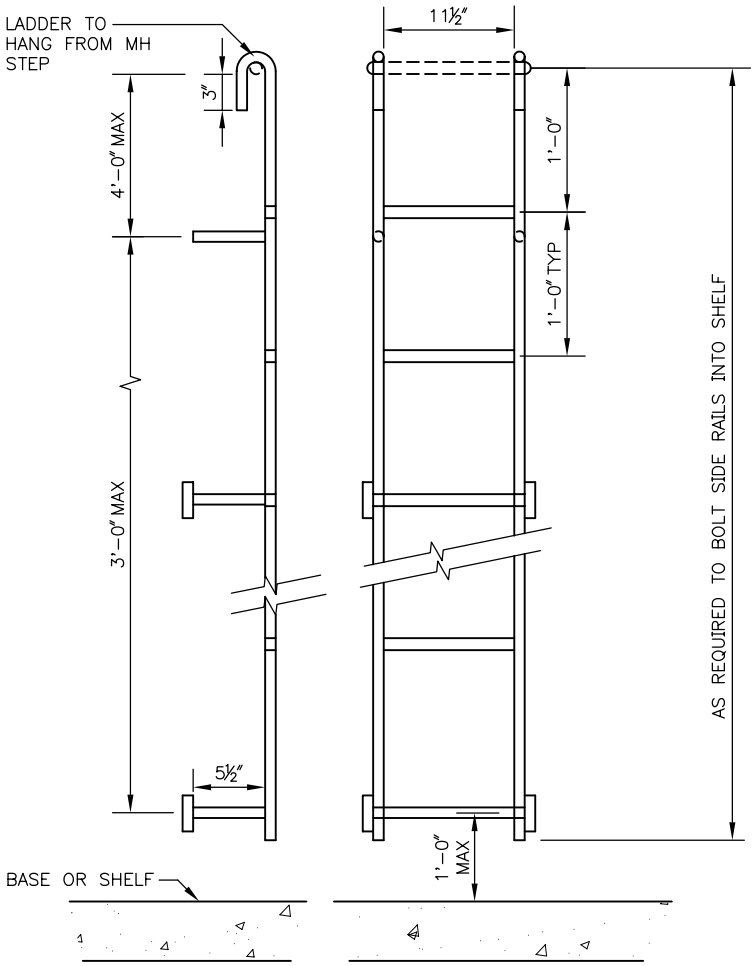

LADDER

NOTE:

1. DIMENSIONS FOR THE MH LADDER AND STEP ARE MINIMUM REQUIREMENTS ONLY.
2. STEPS AND HANDHOLDS SHALL BE INSTALLED AT 1'–0" SPACING. WHEN THE DISTANCE FROM THE LAST (HIGHEST) STEP OR HANDHOLD TO THE TOP OF THE MH FRAME EXCEEDS 1'–0" AND ANOTHER STEP OR HANDHOLD CANNOT BE INSTALLED BECAUSE OF THE LOCATION OF THE MH FRAME, A HANDHOLD SHALL BE INSTALLED BETWEEN THE TOP 2 LAYERS OF BRICK.
3. IF BOTH STEPS AND LADDER ARE REQ'D IN ANY MH, THEY SHALL BE FROM THE SAME MANUFACTURER.

REF STD SPEC SEC 7-05

City of Seattle	NOT TO SCALE	MANHOLE LADDER, STEP AND HANDHOLD

REV DATE: 2005

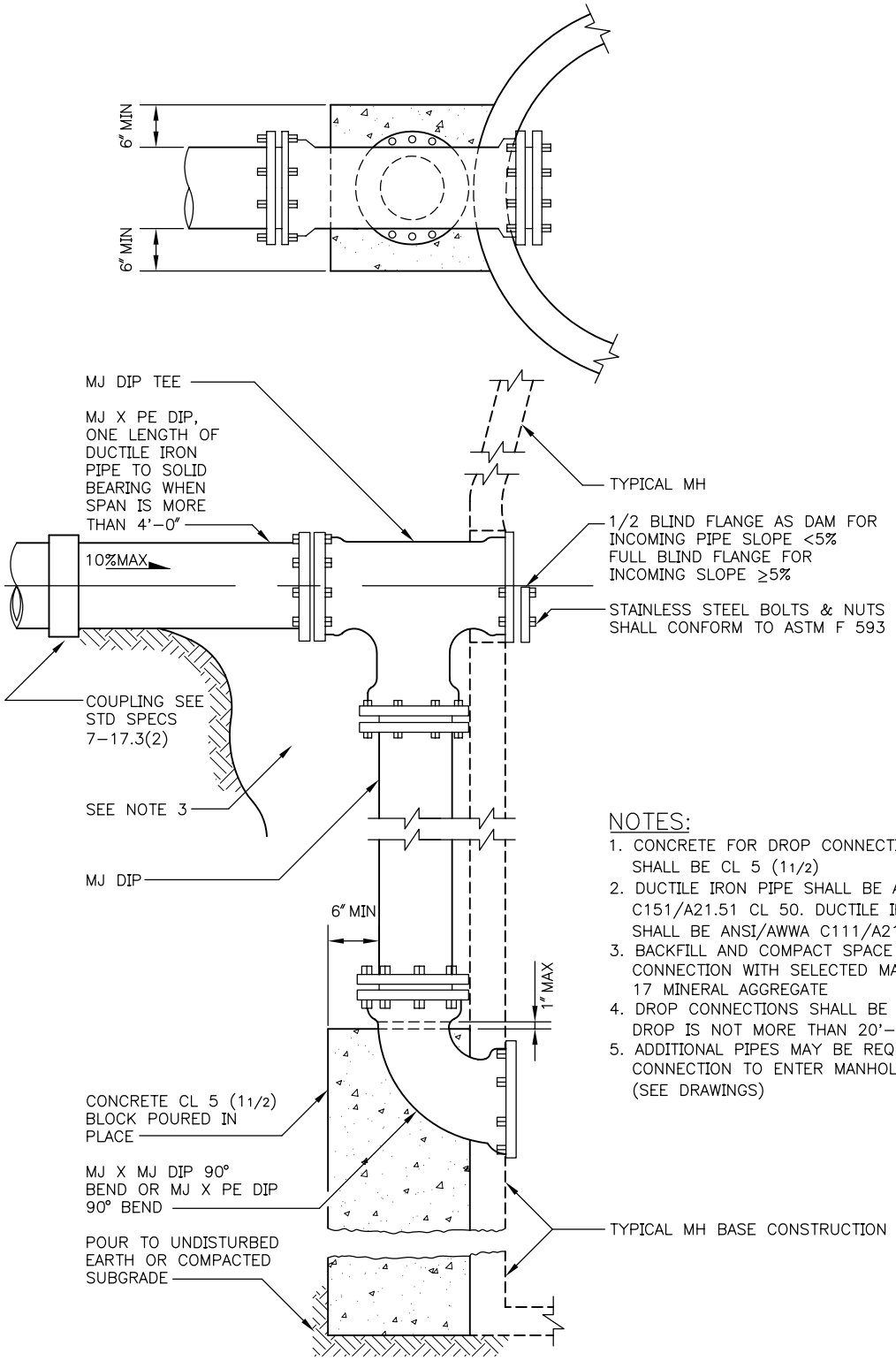

NOTES:

1. CONCRETE FOR DROP CONNECTION SUPPORT SHALL BE CL 5 (1 1/2)
2. DUCTILE IRON PIPE SHALL BE ANSI/AWWA C151/A21.51 CL 50. DUCTILE IRON FITTINGS SHALL BE ANSI/AWWA C111/A21.11
3. BACKFILL AND COMPACT SPACE AROUND DROP CONNECTION WITH SELECTED MATERIAL OR TYPE 17 MINERAL AGGREGATE
4. DROP CONNECTIONS SHALL BE USED WHERE DROP IS NOT MORE THAN 20'-0"
5. ADDITIONAL PIPES MAY BE REQUIRED FOR DROP CONNECTION TO ENTER MANHOLE STRUCTURE (SEE DRAWINGS)

DUCTILE IRON OUTSIDE DROP CONNECTION

REF STD SPEC SEC 7-08

City of Seattle	NOT TO SCALE	OUTSIDE DROP CONNECTION

REV DATE: 2005

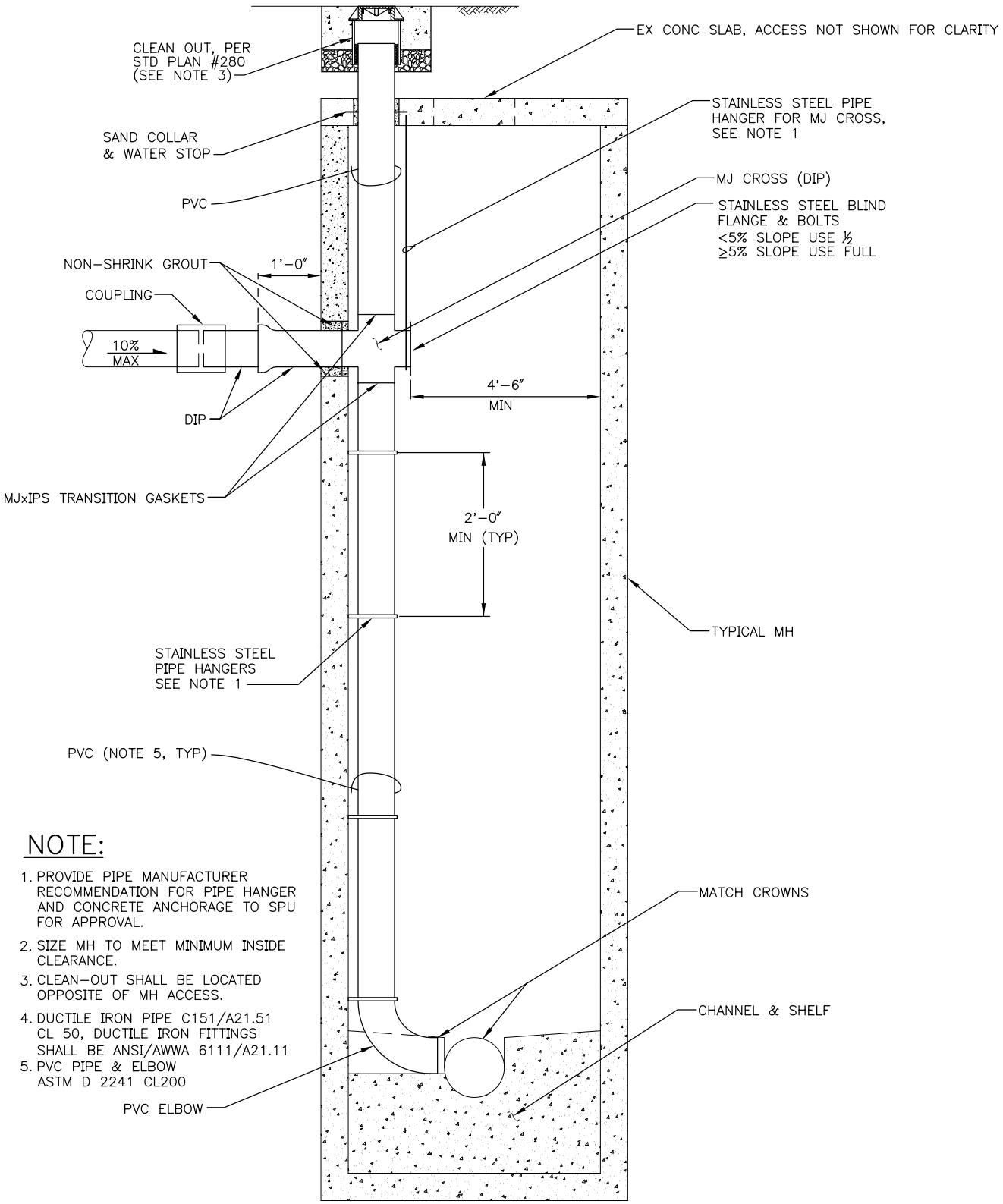

NOTE:

1. PROVIDE PIPE MANUFACTURER RECOMMENDATION FOR PIPE HANGER AND CONCRETE ANCHORAGE TO SPU FOR APPROVAL.
2. SIZE MH TO MEET MINIMUM INSIDE CLEARANCE.
3. CLEAN-OUT SHALL BE LOCATED OPPOSITE OF MH ACCESS.
4. DUCTILE IRON PIPE C151/A21.51 CL 50, DUCTILE IRON FITTINGS SHALL BE ANSI/AWWA 6111/A21.11
5. PVC PIPE & ELBOW ASTM D 2241 CL200

INSIDE DROP

(18" DIAMETER PIPE MAXIMUM)

REF STD SPEC SEC 7-08

City of Seattle	NOT TO SCALE	INSIDE DROP CONNECTION

REV DATE: 2003

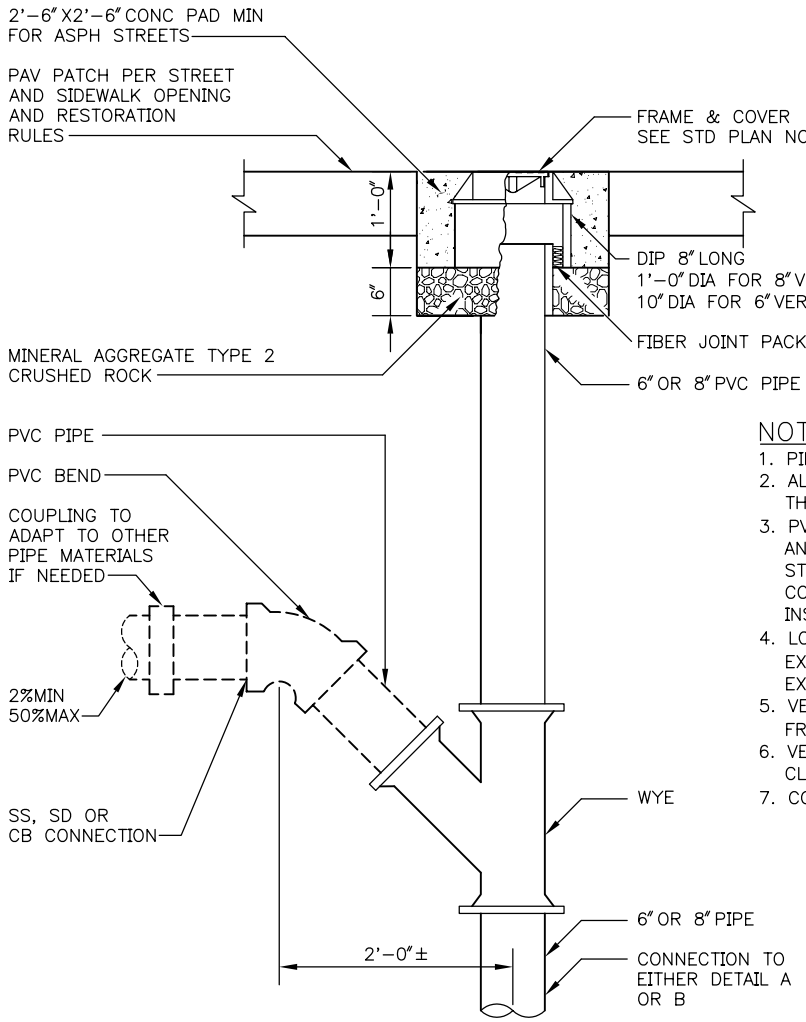

NOTES:

1. PIPE AND FITTINGS SHALL BE PVC PER ASTM D 3034 SDR 35
2. ALL PIPES AND FITTINGS ARE TO BE THE SAME DIAMETER. THE DIAMETER IS TO BE SPECIFIED ON THE PLANS
3. PVC TEE INSERTS SHALL BE BY "INSERT A TEE" OR EQUAL AND SHALL INCLUDE RUBBER SLEEVE, PVC ADAPTER HUB AND STAINLESS STEEL BAND. INSERT SHALL BE INSTALLED IN A CORE DRILLED HOLE PER MANUFACTURER'S INSTRUCTIONS. INSERT SHALL BE FLUSH WITH THE INSIDE WALL OF THE MAIN.
4. LOCATE EDGE OF CORE DRILLED HOLE 1'-0" MINIMUM FROM EXISTING PIPE JOINT AND 2'-0" FROM THE EDGE OF ANY EXISTING OR NEW CONNECTIONS
5. VERTICAL CONNECTION SHALL NOT BE USED UNLESS DEPTH FROM SURFACE TO TOP OF PIPE IS 20'-0" OR GREATER
6. VERTICAL CONNECTIONS ON MAINS OTHER THAN CONCRETE, CLAY OR BRICK CONSTRUCTION SHALL BE PER DRAWINGS
7. CONCRETE HAUNCHING IS TO BE CLASS 5 (1 1/2) CONCRETE

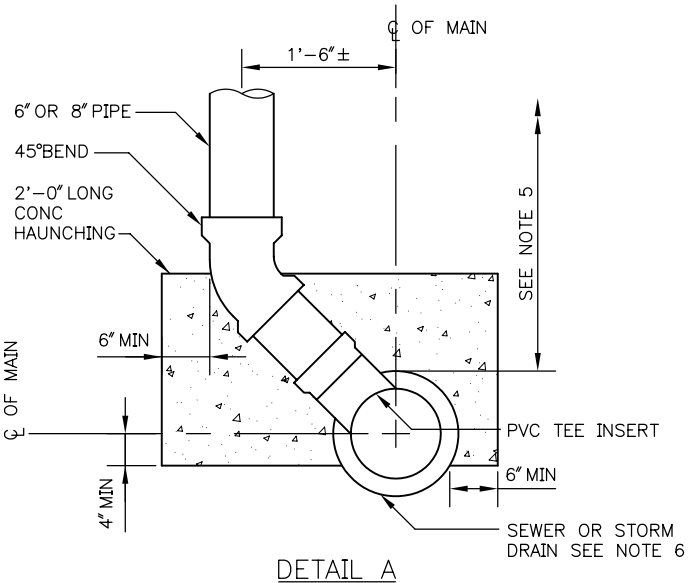

DETAIL A

FOR MAIN 3'-0" DIA OR SMALLER

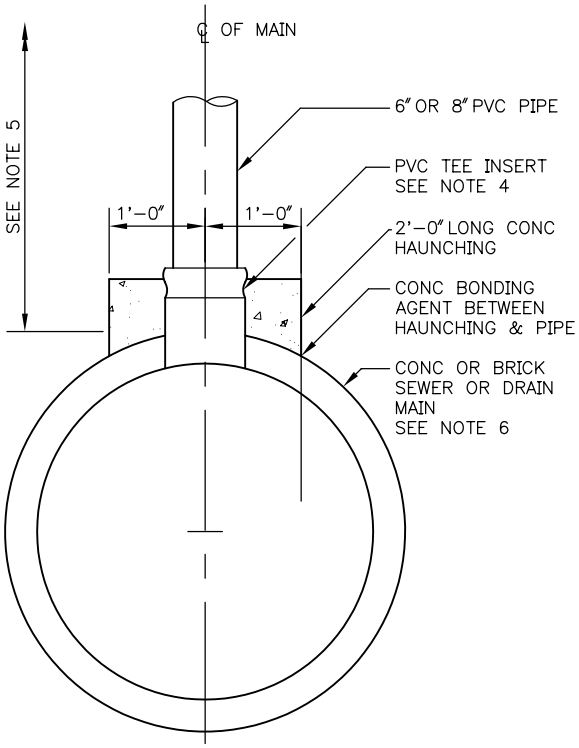

DETAIL B

FOR MAIN 3'-6" DIA OR LARGER

REF STD SPEC SEC 7-08 & 7-17

City of Seattle	NOT TO SCALE	6" OR 8" VERTICAL CONNECTION

REV DATE: 2003

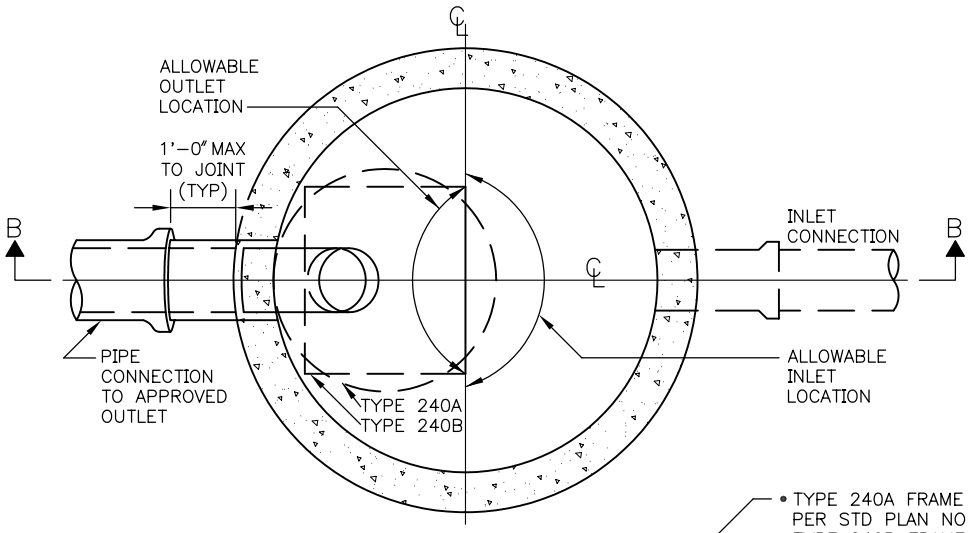

SECTION A–A

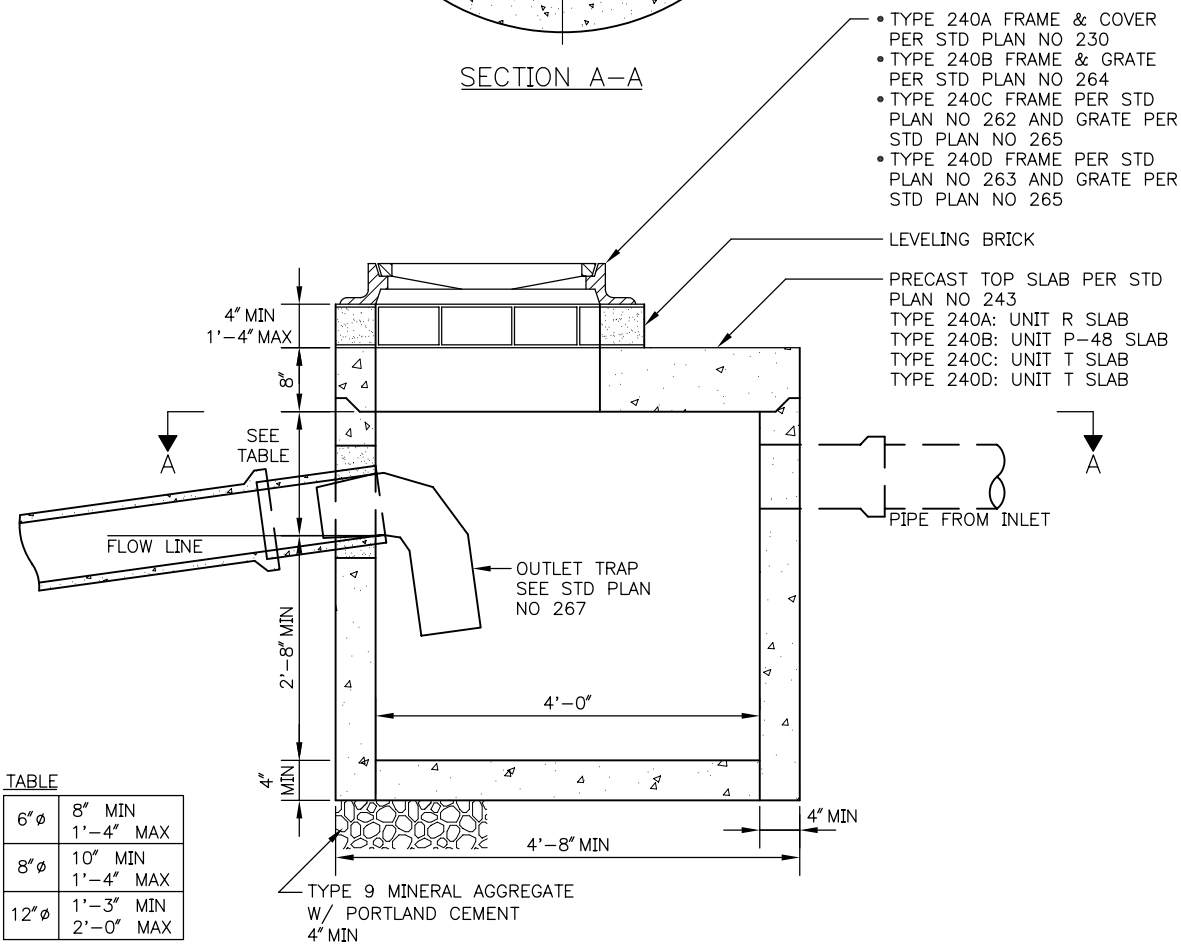

TABLE

6"ø	8" MIN 1'–4" MAX
8"ø	10" MIN 1'–4" MAX
12"ø	1'–3" MIN 2'–0" MAX

SECTION B–B

NOTES:

1. FRAME & GRATE OR FRAME & COVER SHALL BE LOCATED OVER TRAP
2. INVERT OF INLET PIPE SHALL BE 2" MIN ABOVE INVERT OF OUTLET PIPE
3. FRAME AND GRATE SHALL BE LOCATED OVER OUTLET TRAP

REF STD SPEC SEC 7-05

City of Seattle	NOT TO SCALE	TYPE 240 CATCH BASIN

DATE: 2005

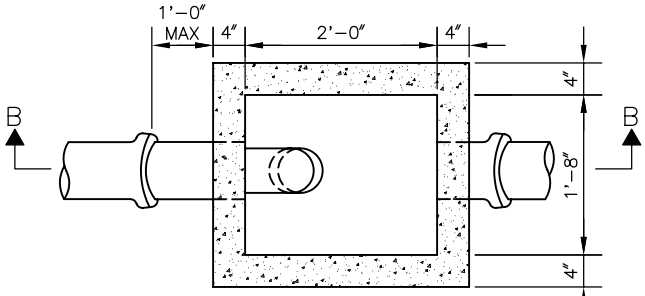

SECTION A-A

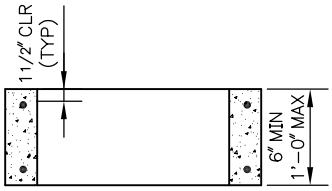

SECTION D-D

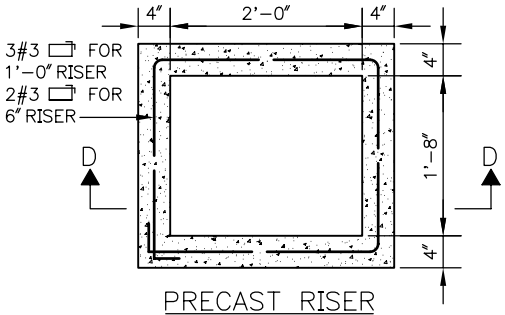

PRECAST RISER REINFORCING

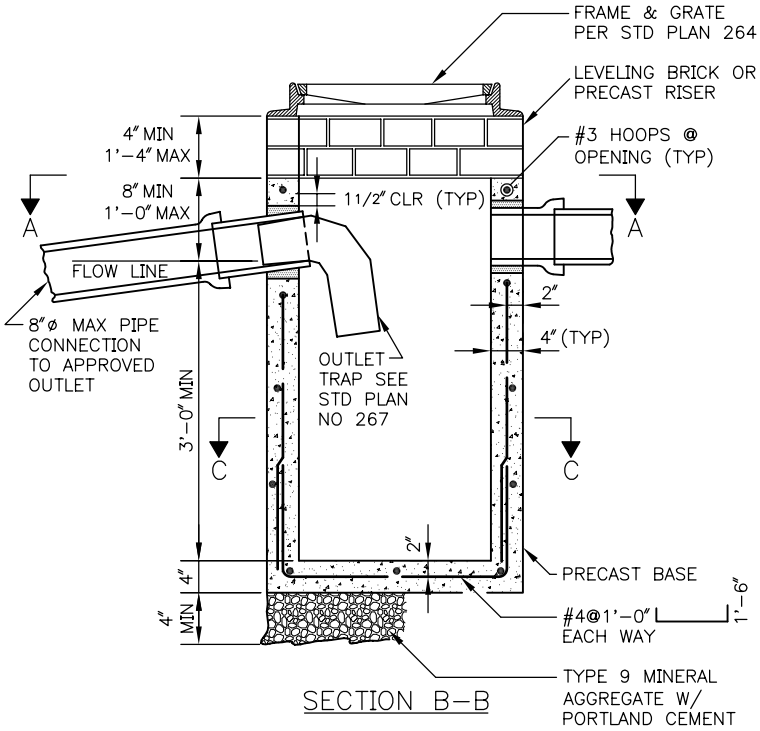

SECTION B-B

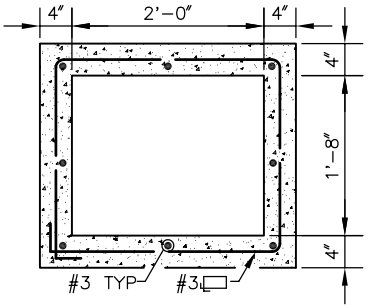

SECTION C-C

NOTES:

1. THIS CATCH BASIN IS FOR INSTALLATIONS IN ALLEYS AND UNPAVED AREAS IN THE RIGHT-OF-WAY. ANY OTHER USE IN THE R/W WILL REQUIRE APPROVAL OF SPU
2. FOR CURB DISCHARGE INSTALLATION SEE STD PLAN NO 241b
3. INSTALL PER STD PLAN NO 261
4. MATERIAL: CONCRETE CLASS AX REINFORCING STEEL ASTM A615 GR60
5. INLET INVERT EL. TO BE HIGHER THAN OUTLET INVERT EL.

REF STD SPEC SEC 7-05

City of Seattle	NOT TO SCALE	TYPE 241 CATCH BASIN

DATE: 2005

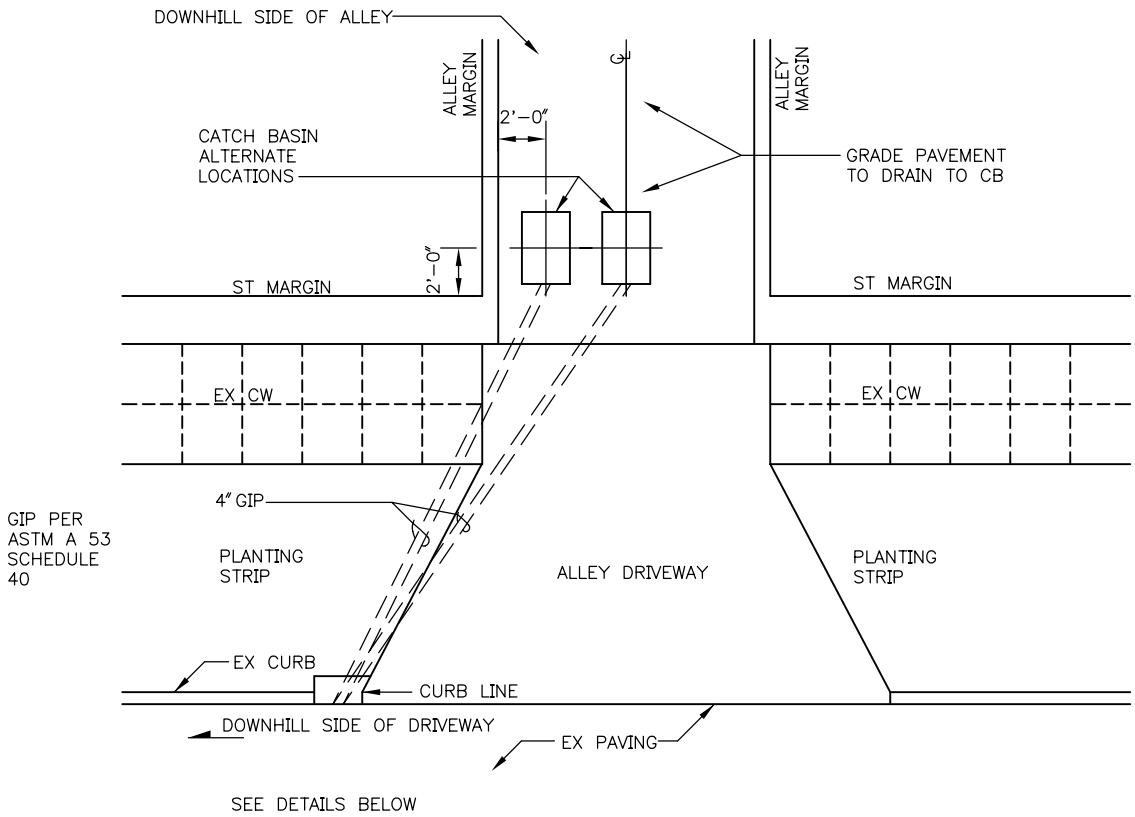

PLAN

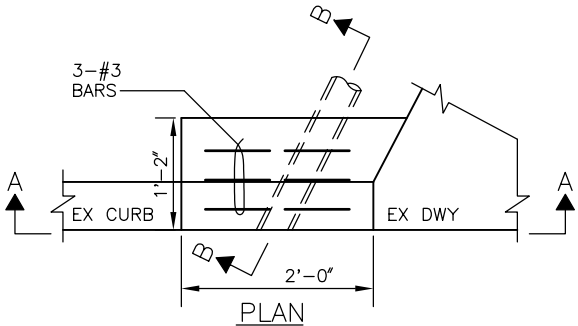

PLAN

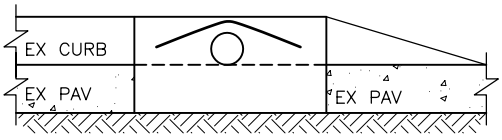

SECTION A–A

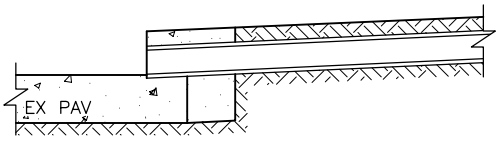

SECTION B–B

REF STD SPEC SEC 7-05 & 7-08

City of Seattle	NOT TO SCALE	TYPE 241 CATCH BASIN INSTALLATIONS

REV DATE: 2005

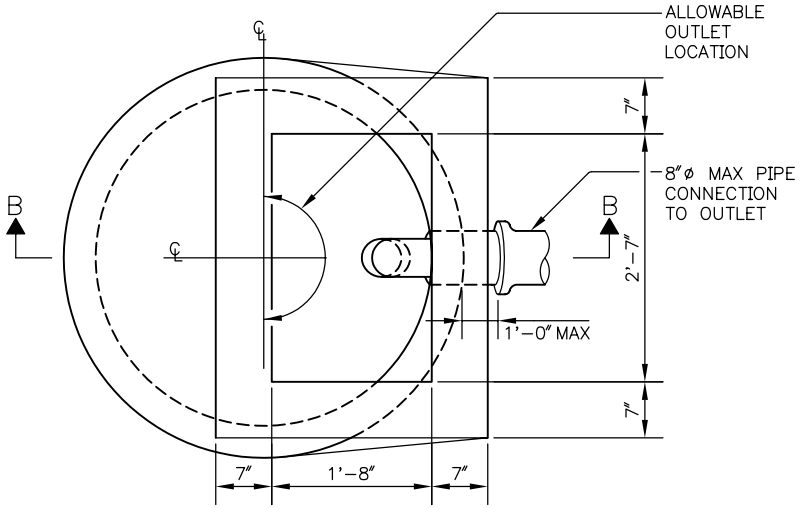

SECTION A-A

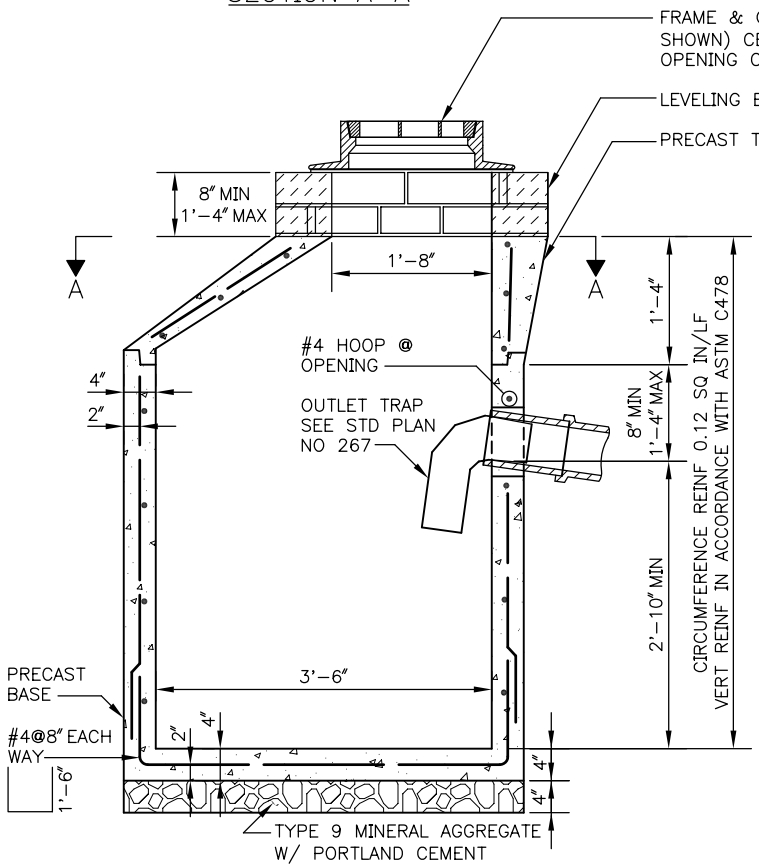

TYPE A
SECTION B-B

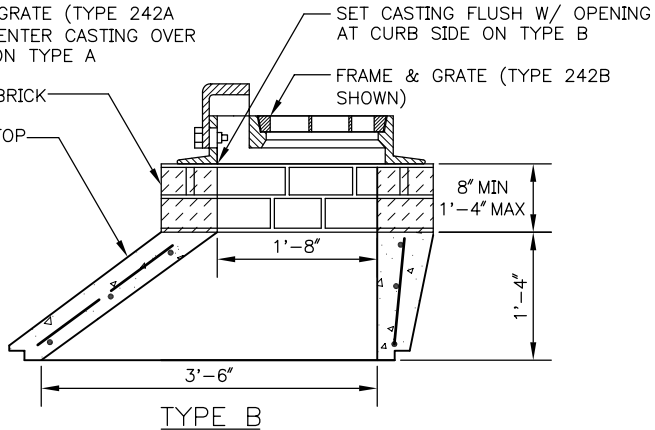

TYPE B

CB TYPE	CASTING	
	FRAME	GRATE
A OR A.1	NO 262	NO 265
B OR B.1	NO 263	NO 265

NOTES:

1. MATERIAL: CONCRETE: CLASS AX
   REINFORCING STEET: ASTM A 615 GR 60
2. INSTALL & LOCATE PER STD PLANS NOS 260 & 261
3. A.1 OR B.1 CAN ONLY BE USED WHEN SPECIFIED ON CONTRACT PLANS
4. FOR TYPE 242A.1 OR B.1 ROTATE CATCH BASIN 180° FROM STANDARD. SEE STD PLAN NO 260
5. OUTLET TRAP TO BE LOCATED DIRECTLY BELOW FRAME AND GRATE

REF STD SPEC SEC 7-05

City of Seattle	NOT TO SCALE	TYPE 242 CATCH BASIN

REV DATE: 2003

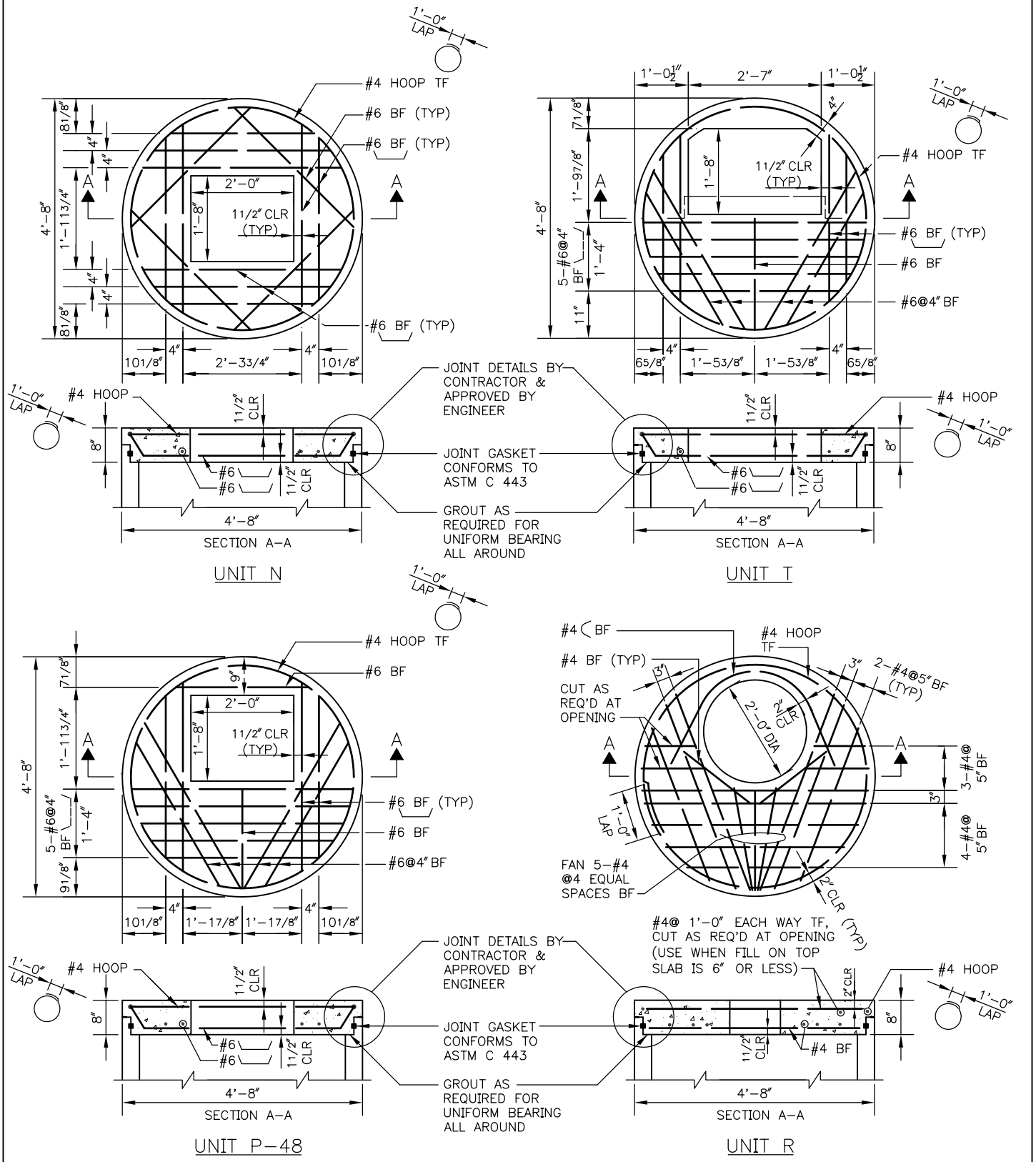

REF STD SPEC SEC 7-05

City of Seattle	NOT TO SCALE	PRECAST CATCH BASIN TOP SLAB

REV DATE: 2003

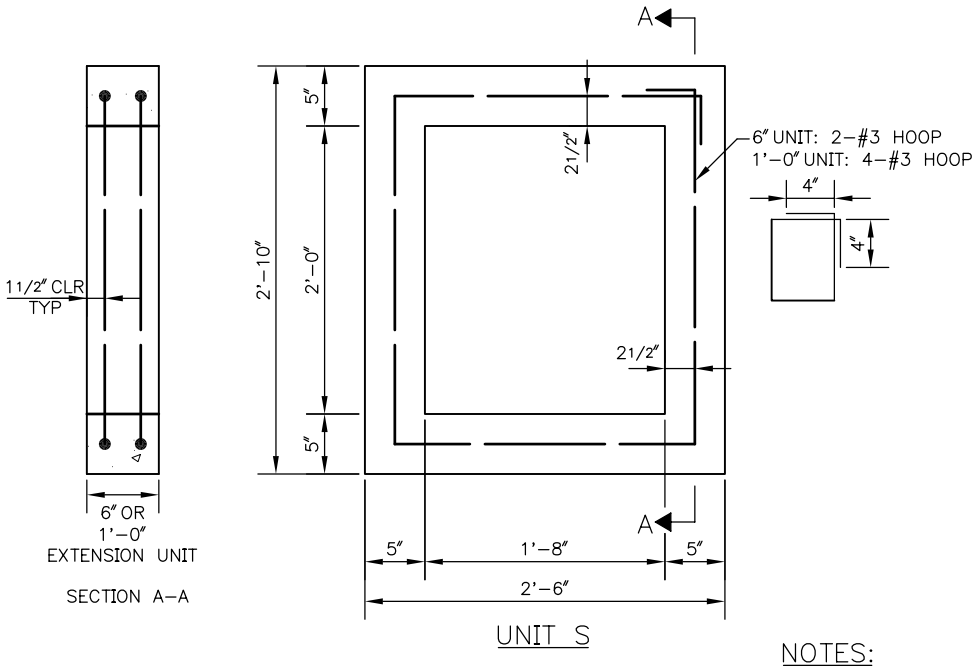

SECTION A-A

UNIT S

NOTES:

1. CONCRETE: CLASS AX
2. REINFORCING STEEL: ASTM A615 GR 60

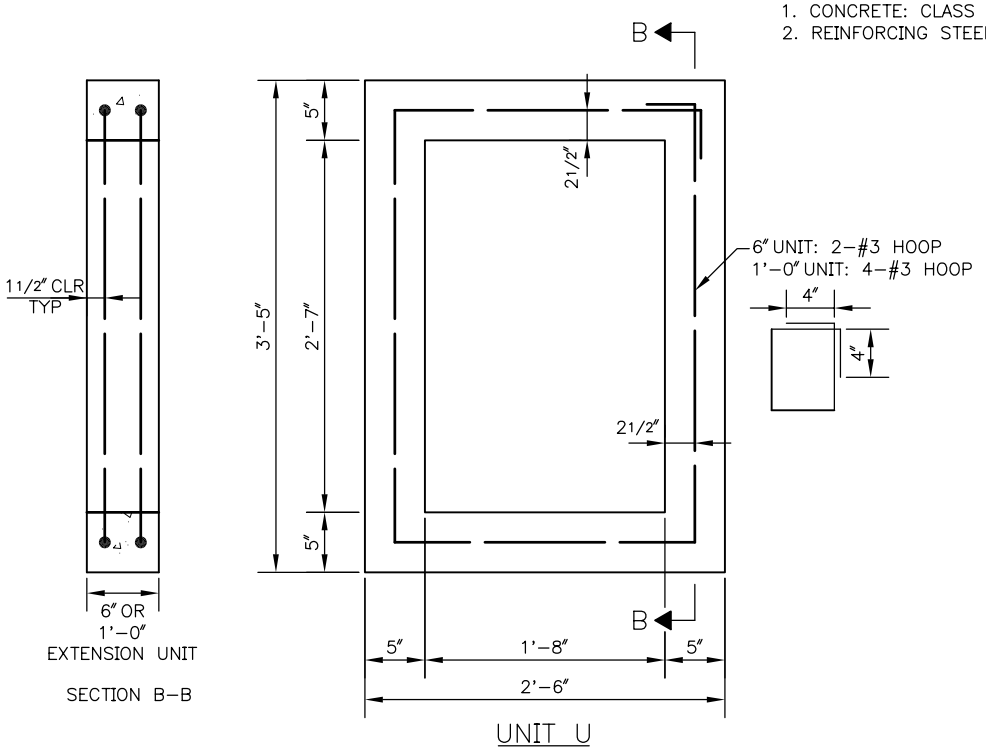

SECTION B-B

UNIT U

REF STD SPEC SEC 7-05

City of Seattle	NOT TO SCALE	PRECAST CATCH BASIN EXTENSION RISERS

REV DATE: 2003

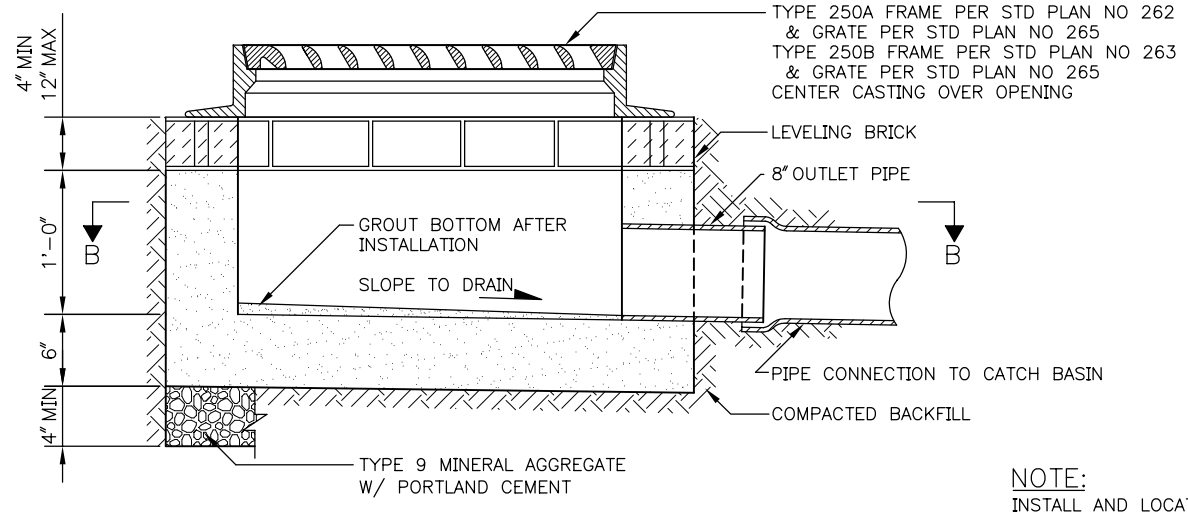

SECTION A–A

NOTE:
INSTALL AND LOCATE
PER STD PLAN NO 260

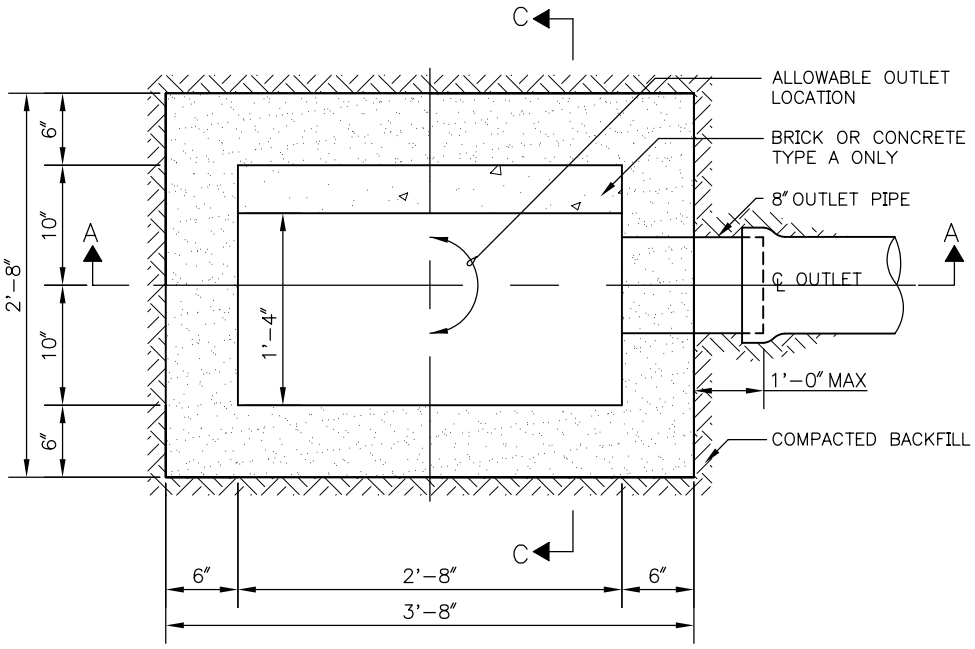

SECTION B–B

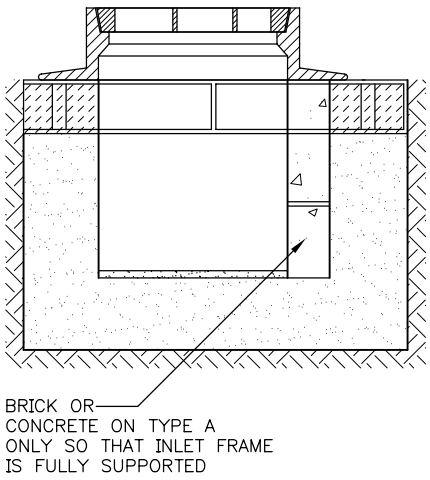

SECTION C–C
TYPE A ONLY

REF STD SPEC SEC 7-05

City of Seattle	NOT TO SCALE	TYPE 250 INLET

REV DATE: 2003

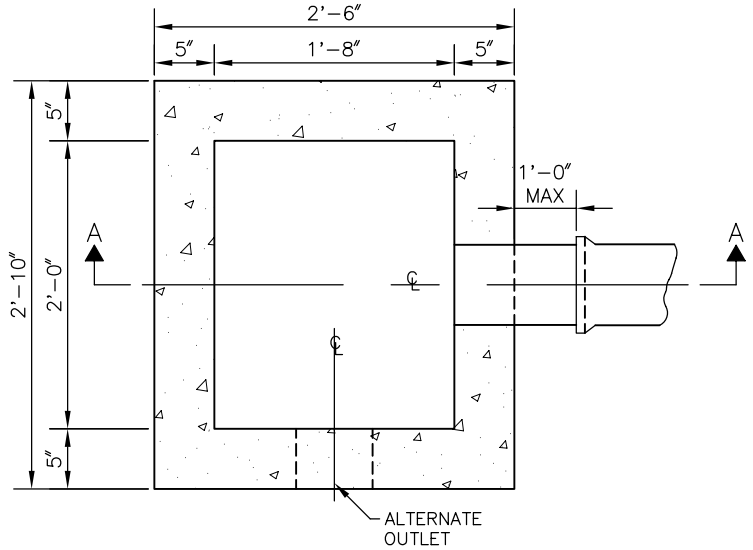

PLAN

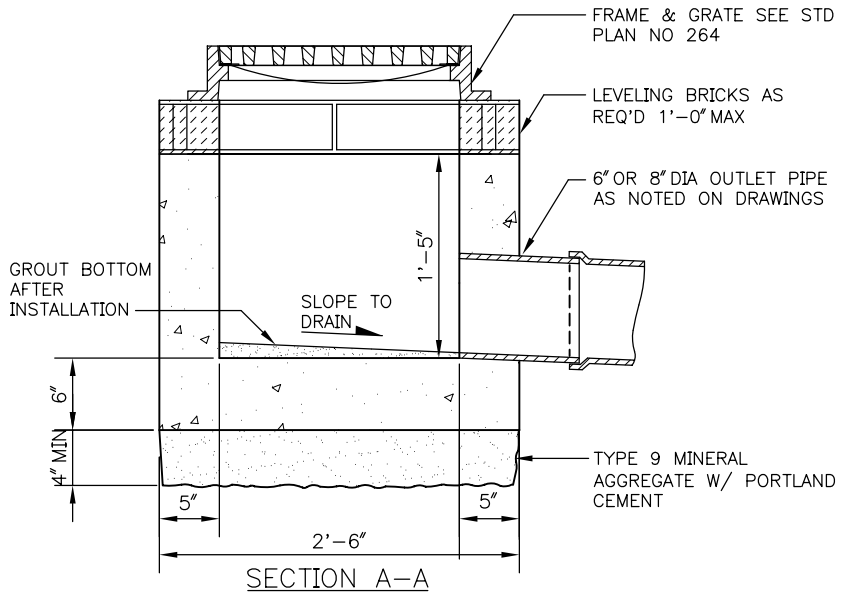

SECTION A-A

REF STD SPEC SEC 7-05

City of Seattle	NOT TO SCALE	TYPE 252 INLET

REV DATE: 2005

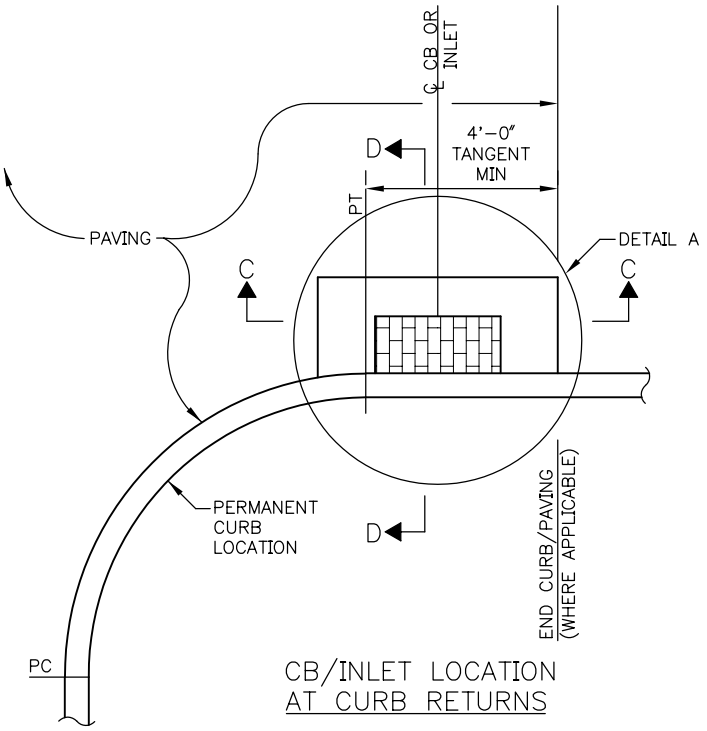

CB/INLET LOCATION
AT CURB RETURNS

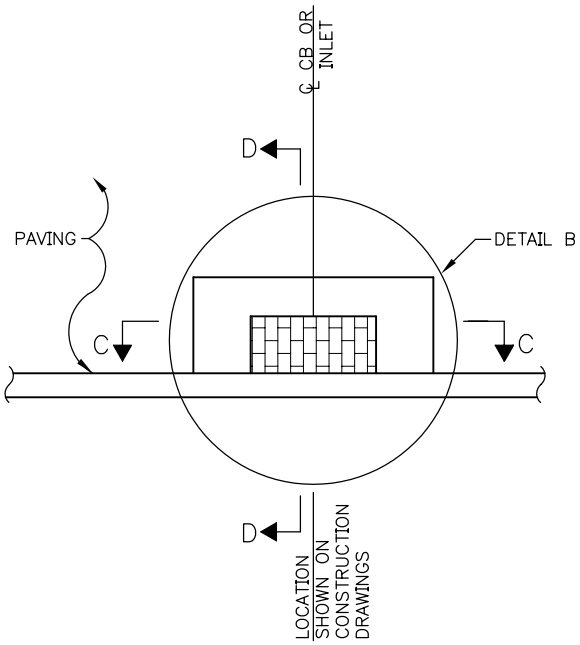

CB/INLET LOCATION
NOT AT CURB RETURNS

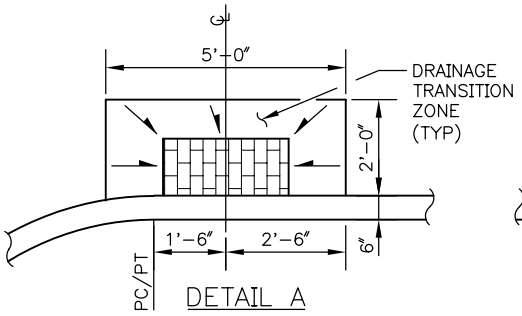

DETAIL A

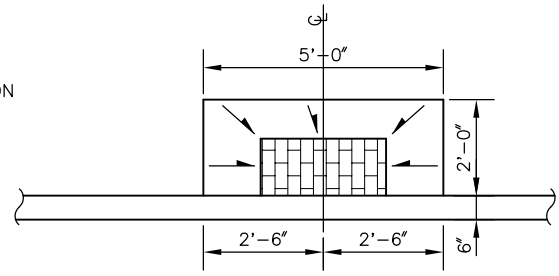

DETAIL B

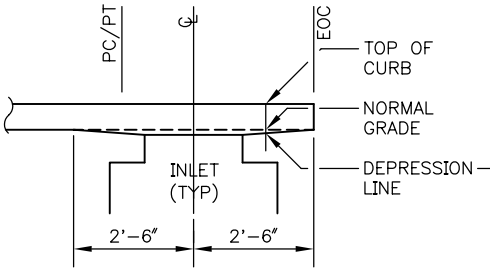

SECTION C–C

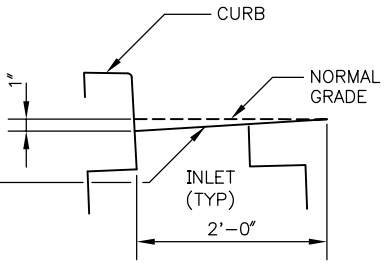

SECTION D–D

NOTE

INLET/CB SHALL NOT BE PLACED IN CROSSWALKS OR IN FRONT OF WHEELCHAIR RAMPS

REF STD SPEC SEC 7-05

City of Seattle	NOT TO SCALE	INLET / CATCH BASIN LOCATION & INSTALLATION

REV DATE: 2005

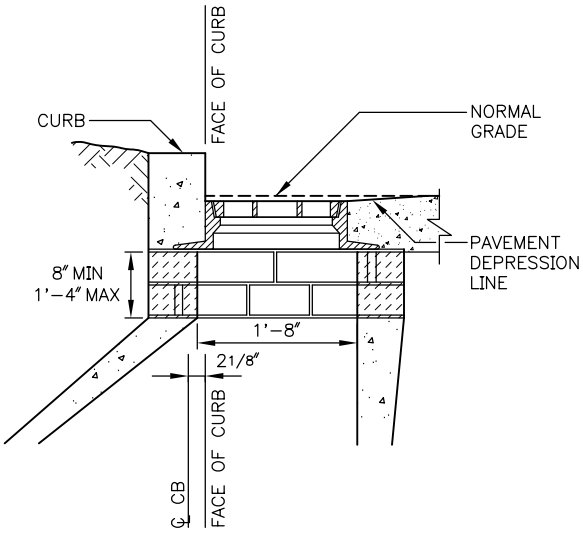

TYPE 242A CB
(TYPE 250A INLET SIMILAR)
NOTE – TYPE 240C GRATE

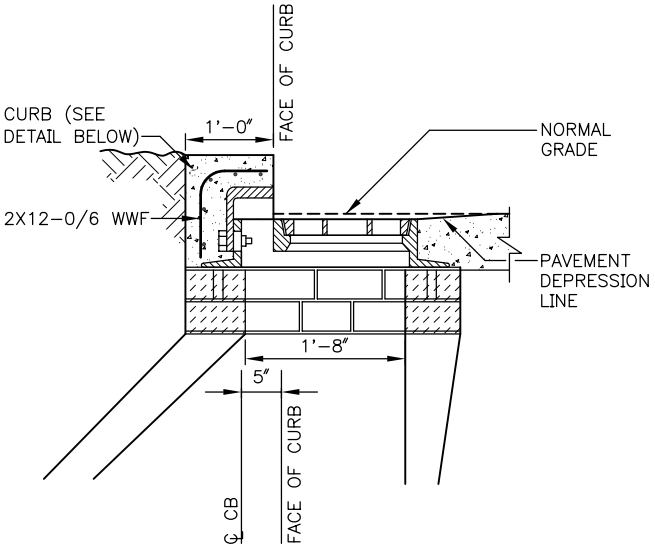

TYPE 242B CB
(TYPE 250B INLET SIMILAR)

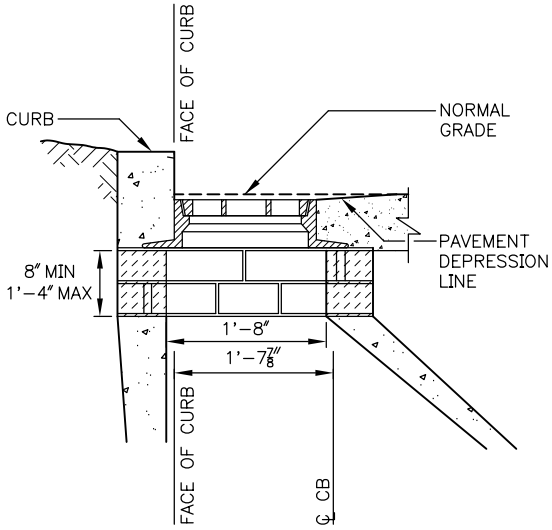

TYPE 242A.1 CB

NOTES:

1. TYPE 242A.1 OR B.1 INSTALLATION IS ROTATED 180° FROM TYPE 242A OR 242B
2. A.1 IS SHOWN, B.1 IS SIMILAR
3. A.1 OR B.1 CAN ONLY BE USED WHEN SPECIFIED ON DRAWINGS

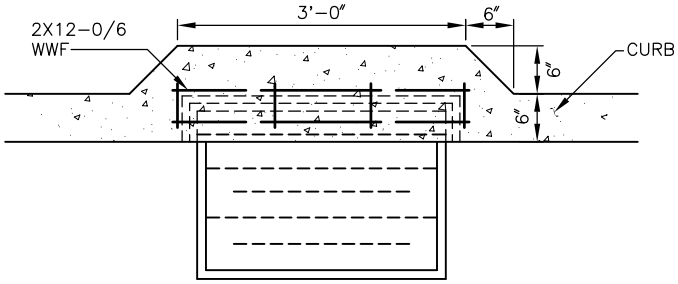

CURB DETAIL (PLAN VIEW) FOR
TYPE 242B CB & TYPE 250B INLET

REF STD SPEC SEC 7-05

City of Seattle	NOT TO SCALE	CATCH BASIN & INLET INSTALLATION

REV DATE: 2003

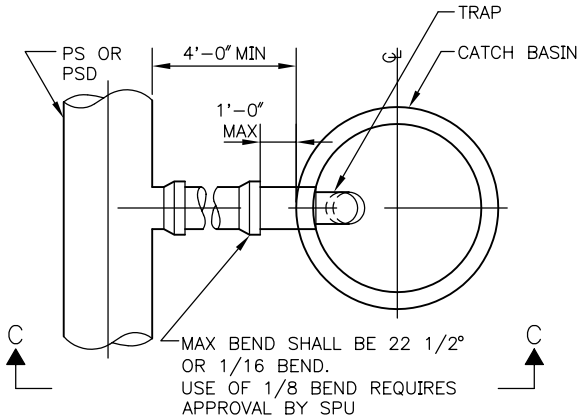

TYPE A

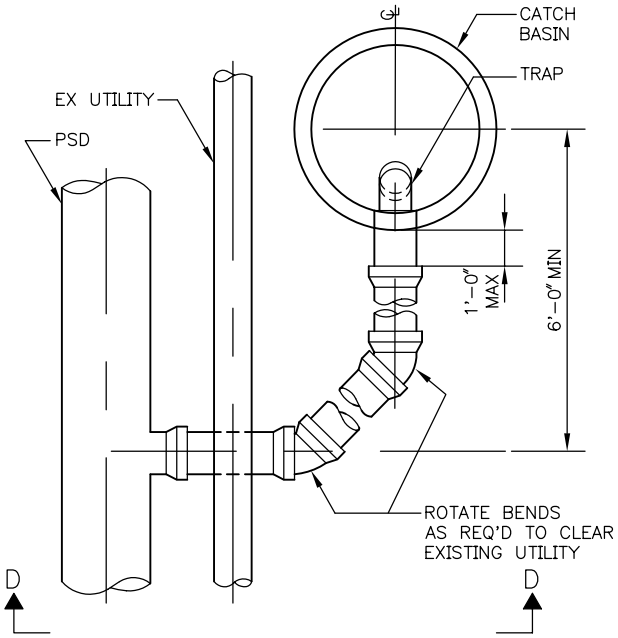

TYPE B

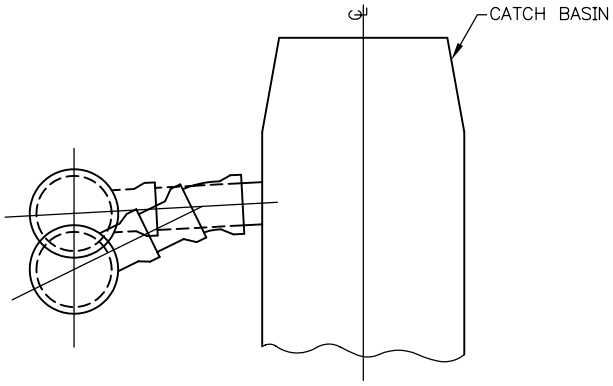

SECTION C–C

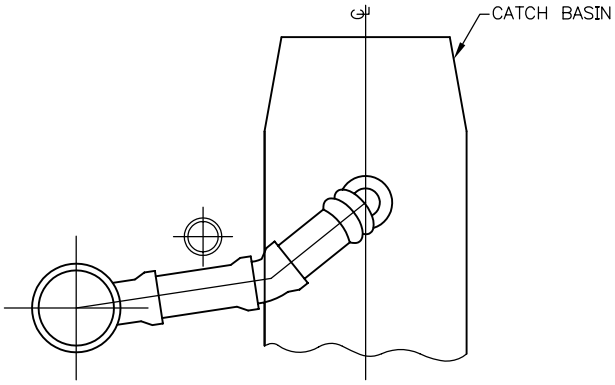

SECTION D–D

NOTES:

1. CONNECTIONS SHALL MAINTAIN A MINIMUM OF 2% AND A MAXIMUM OF 50% GRADE
2. TYPE A CONNECTION MAY BE USED UNDER THE FOLLOWING CIRCUMSTANCES:
   A. THE MAXIMUM OF 50% GRADE IS NOT EXCEEDED
   B. THERE IS NO INTERFERENCE WITH EXISTING OR PROPOSED UTILITIES

REF STD SPEC SEC 7-08

City of Seattle	NOT TO SCALE	TYPICAL CATCH BASIN CONNECTION

REV DATE: 2003

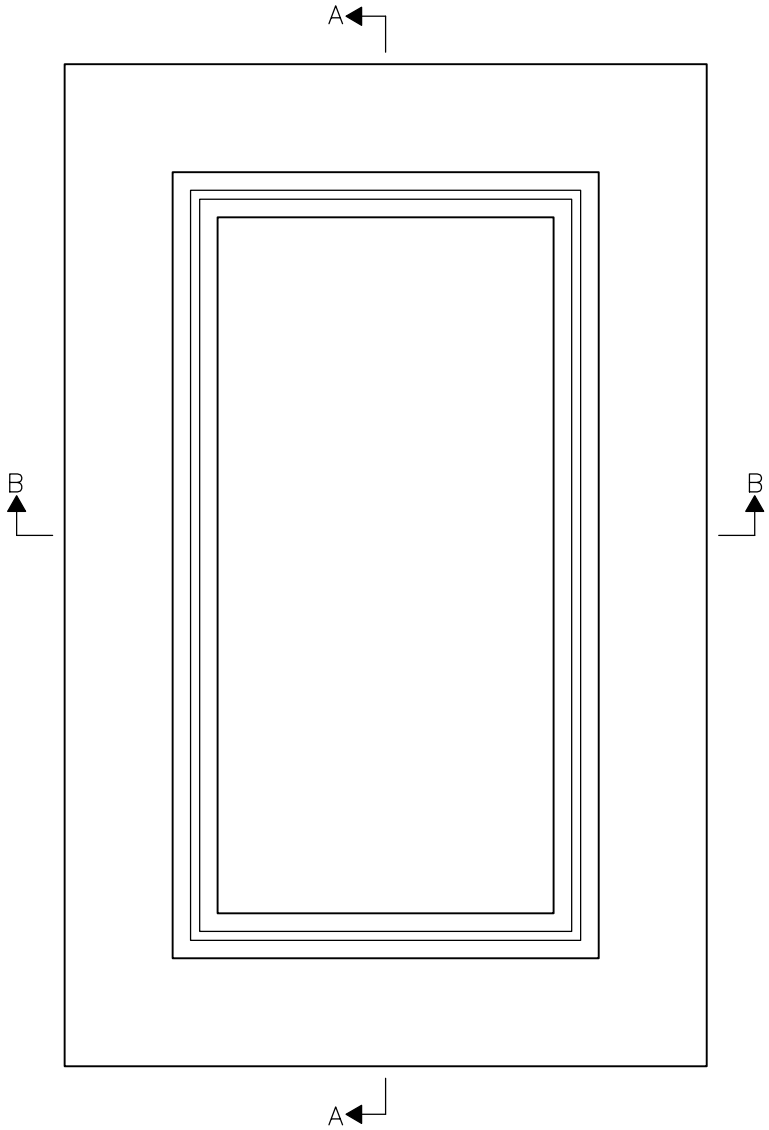

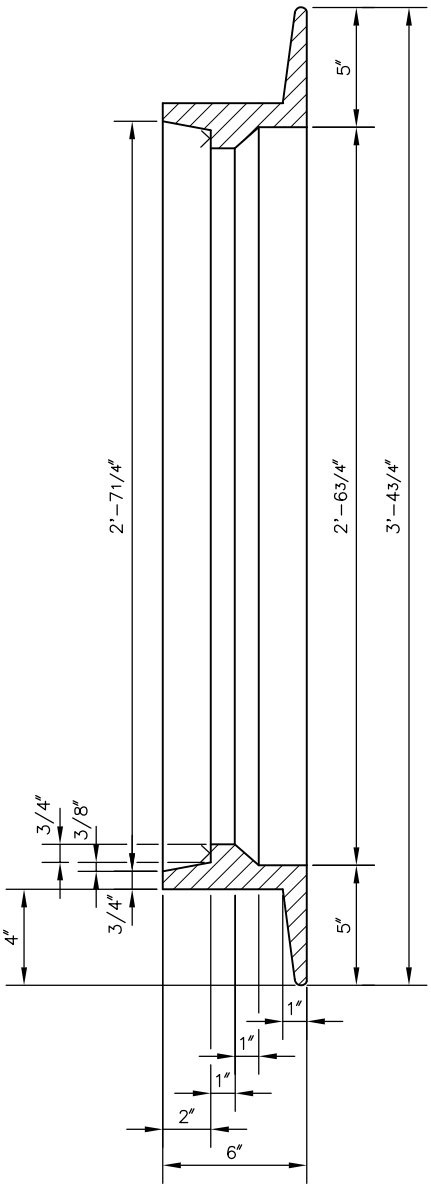

SECTION A-A

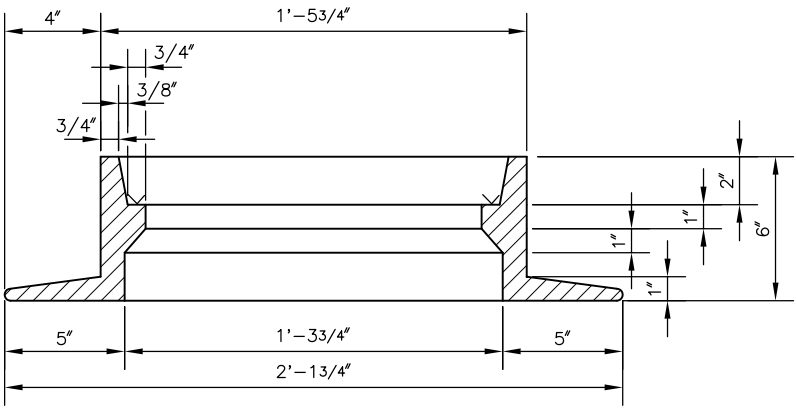

SECTION B-B

REF STD SPEC SEC 9-12

City of Seattle	NOT TO SCALE	TYPE 262 INLET FRAME

REV DATE: 2003

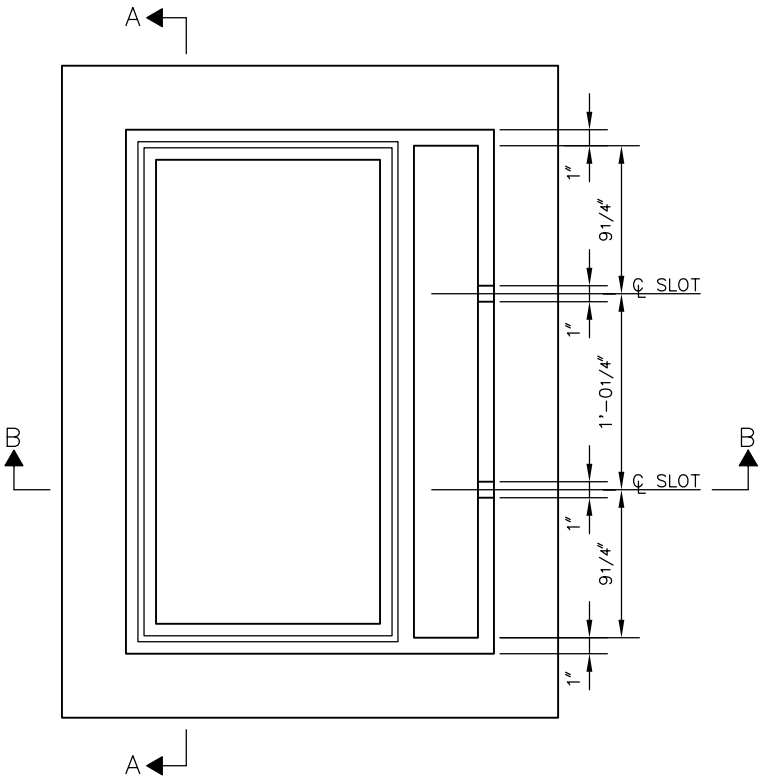

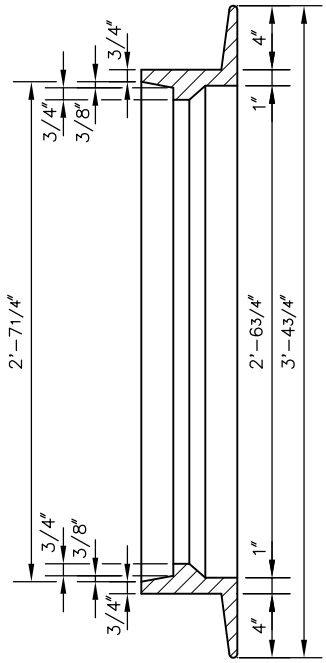

SECTION A-A

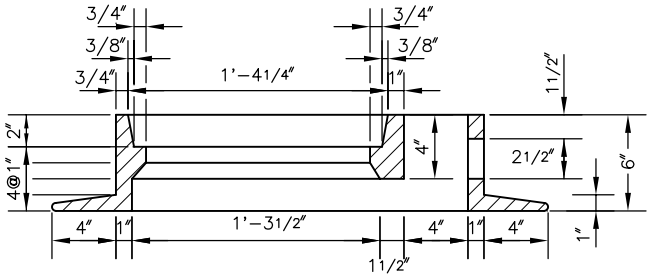

SECTION B-B

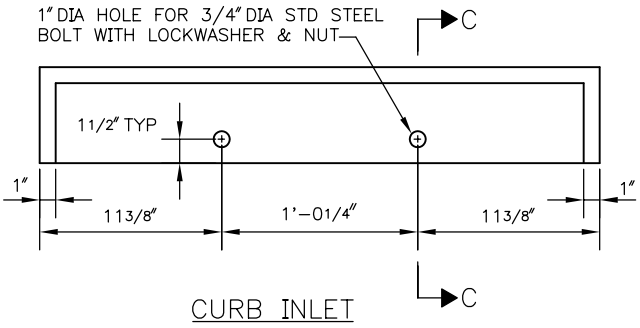

CURB INLET

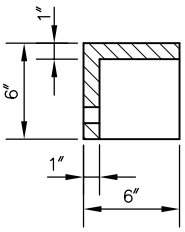

SECTION C-C

REF STD SPEC SEC 9-12

City of Seattle	NOT TO SCALE	TYPE 263 INLET FRAME

REV DATE: 2003

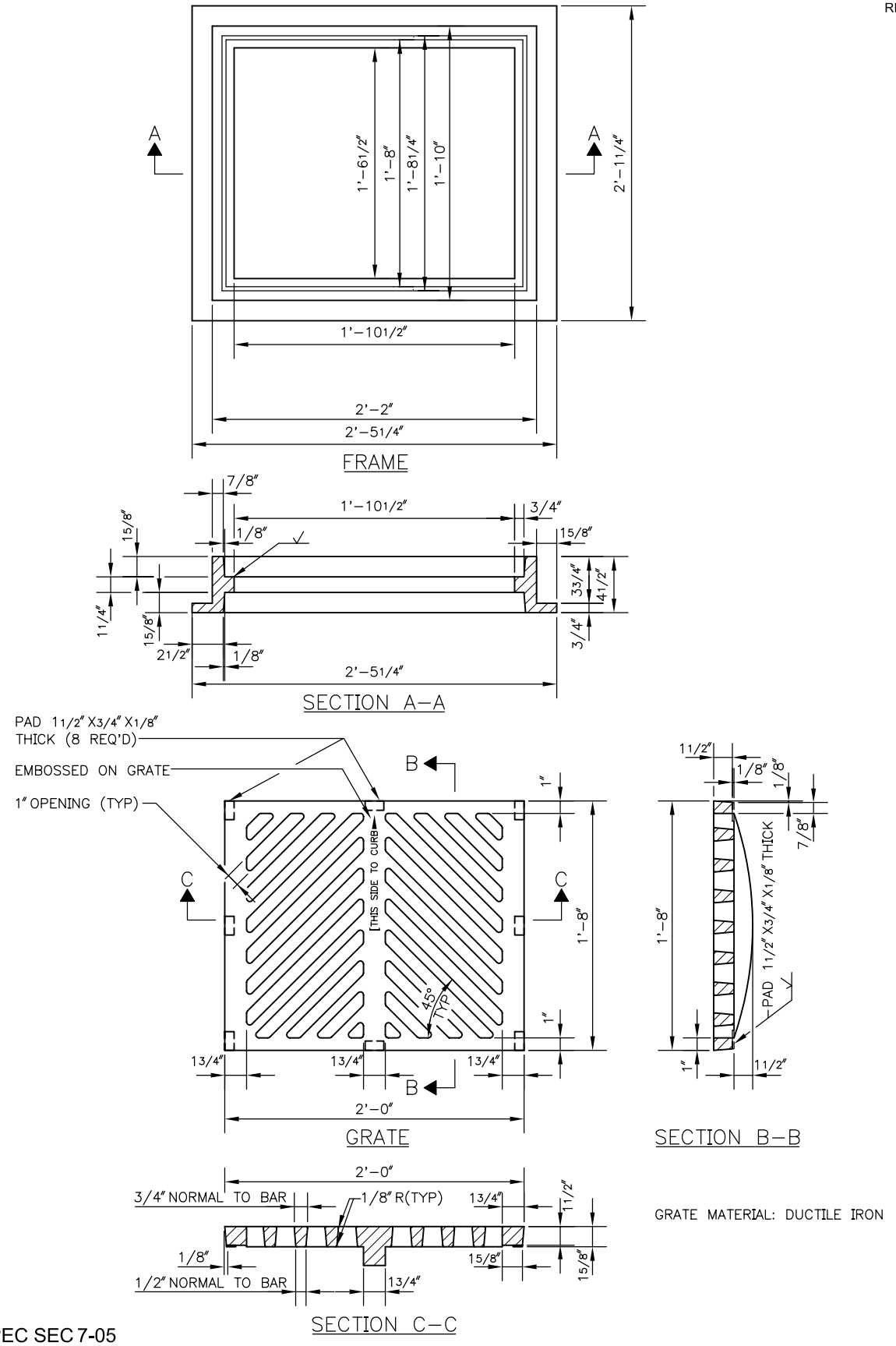

GRATE MATERIAL: DUCTILE IRON

REF STD SPEC SEC 7-05

City of Seattle	NOT TO SCALE	INLET FRAME & GRATE

REV DATE: 2003

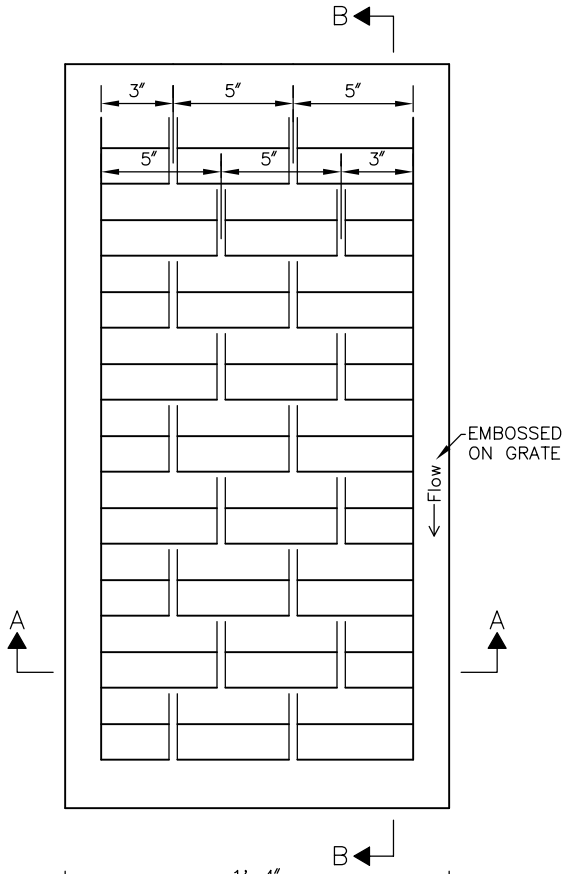

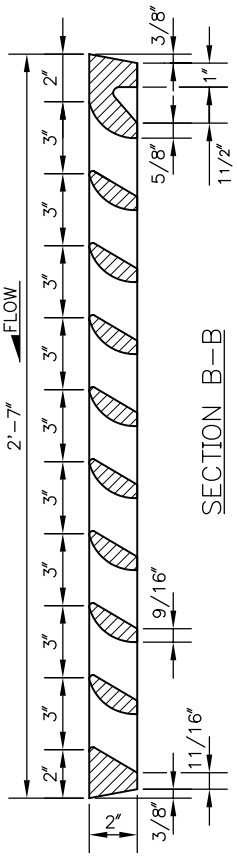

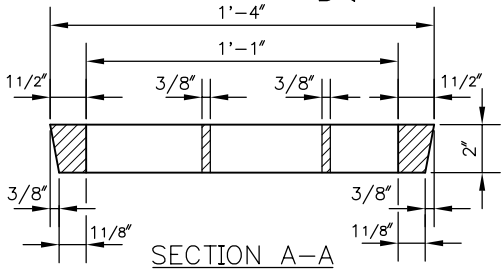

GRATE MATERIAL:
DUCTILE IRON

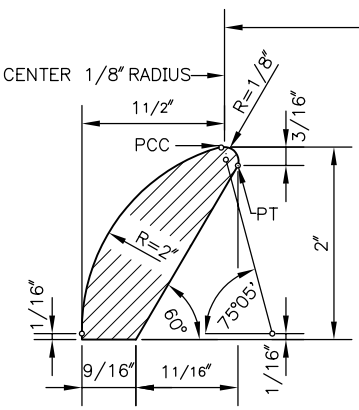

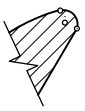

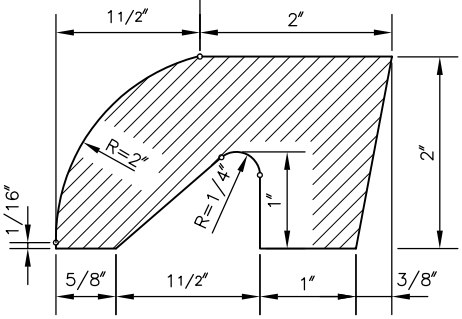

REF STD SPEC SEC 7-05

City of Seattle	NOT TO SCALE	VANED GRATE

REV DATE: 2003

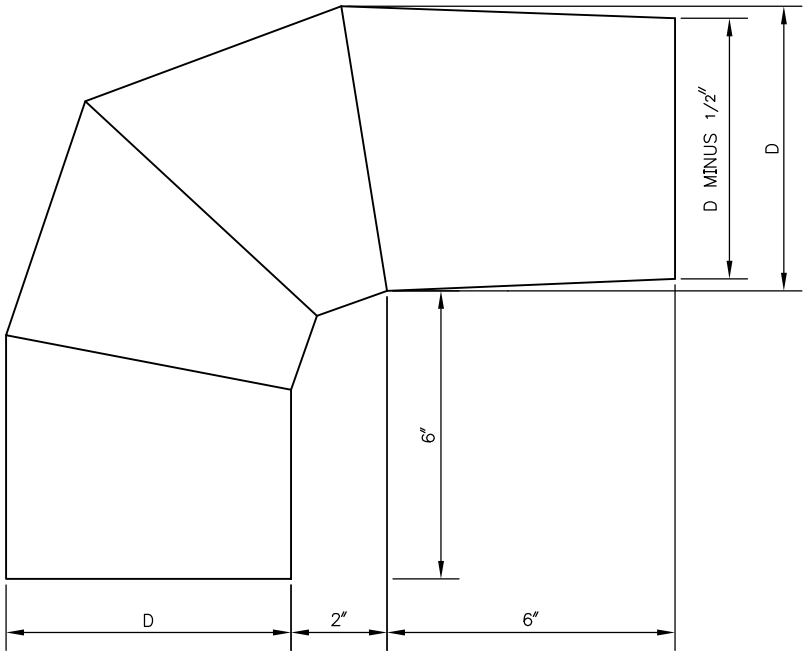

TYPE A

FOR USE WITH OUTLET PIPE WHICH SLOPES 10% OR LESS

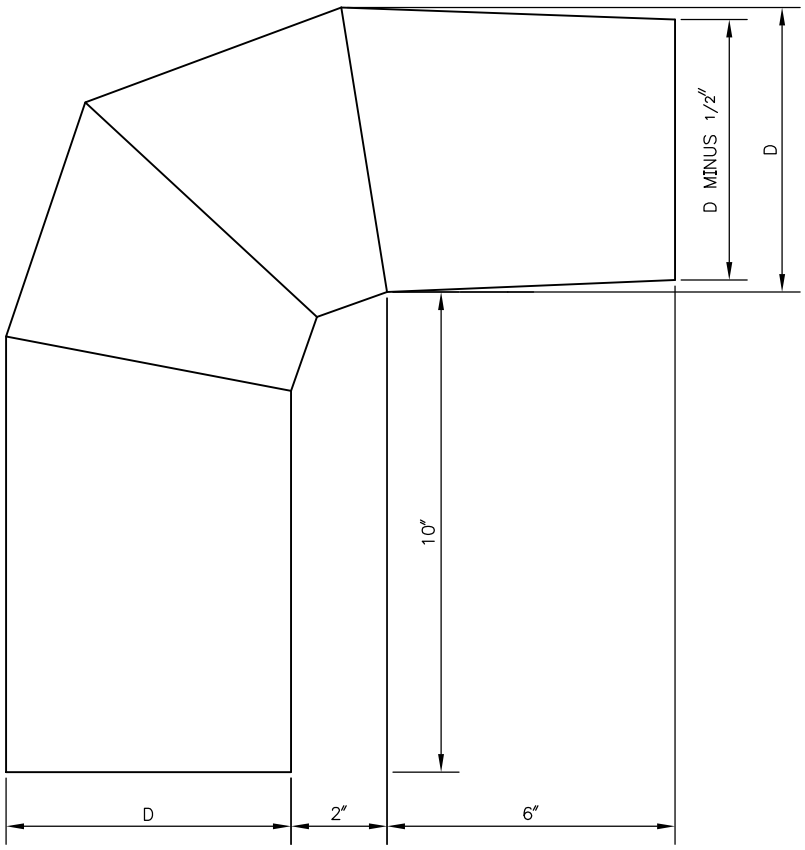

TYPE B

FOR USE WITH OUTLET PIPE WHICH SLOPES MORE THAN 10%

NOTES:

1. TRAP TO BE MADE OF 22 GA (0.0336") GALVANIZED SHEET METAL OR 18 GA (0.05") ALUMINUM
2. ALL JOINTS TO BE SEAMED AND SOLDERED, OR WELDED
3. ALL LONGITUDINAL JOINTS TO BE RIVETED OR WELDED
4. DIAMETER "D" IS NOMINAL DIAMETER OF OUTLET PIPE

REF STD SPEC SEC 9-12

City of Seattle	NOT TO SCALE	OUTLET TRAP

REV DATE: 2003

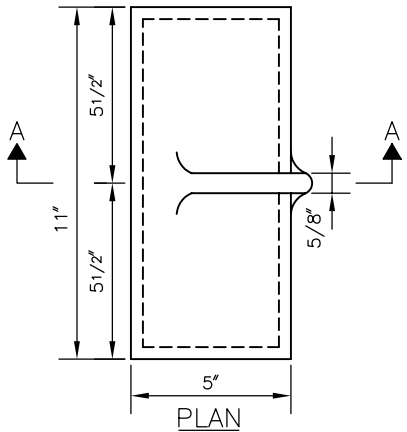

PLAN
TYPE C TRAP

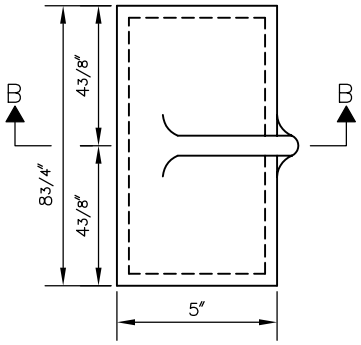

PLAN
TYPE D TRAP

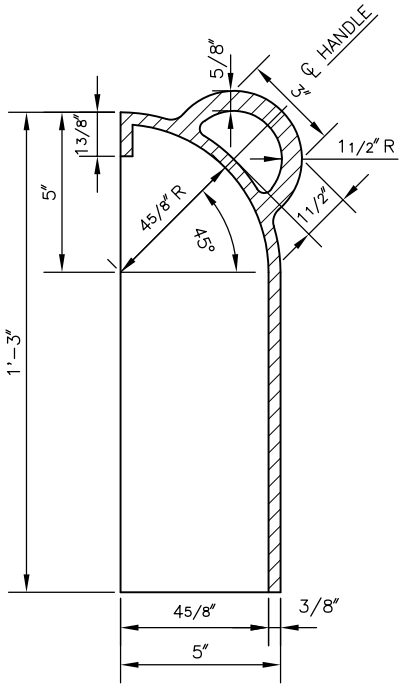

SECTION A–A

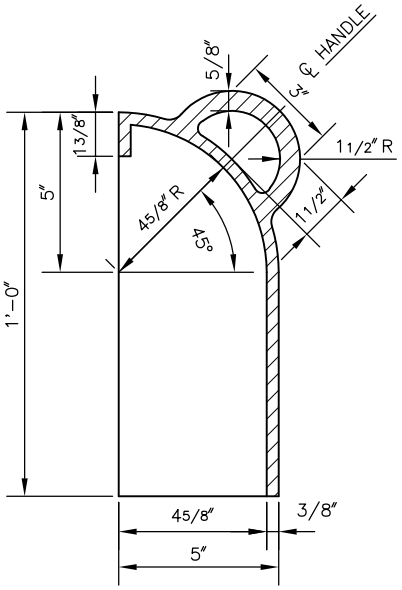

SECTION B–B

NOTES:
1. TYPE 267C TRAP TO BE USED WITH 8" ID OUTLET PIPE. TYPE 267D TRAP TO BE USED WITH 4" OR 6" ID OUTLET PIPE
2. TRAP MAY BE CAST IRON ASTM A 48 CLASS 25 OR CAST STEEL ASTM A 27 GRADE 70–36
3. TRAP AND TRAP HOOK TO HAVE A BITUMINOUS COATING INSIDE AND OUT

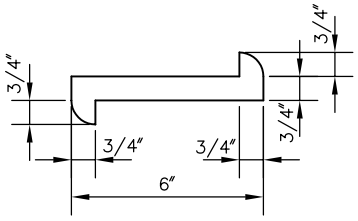

TRAP HOOK
TRAP HOOKS MAY BE ROUND OR SQUARE IN CROSS–SECTION

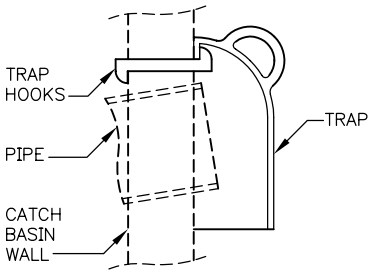

TRAP INSTALLATION

REF STD SPEC SEC 7-05

City of Seattle	NOT TO SCALE	OUTLET TRAP (FOR DOPAR USE ONLY)

REV DATE: 2005

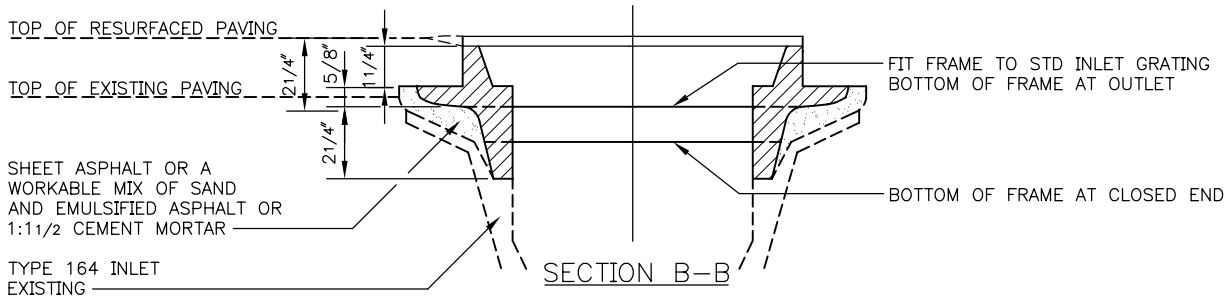

SECTION B–B

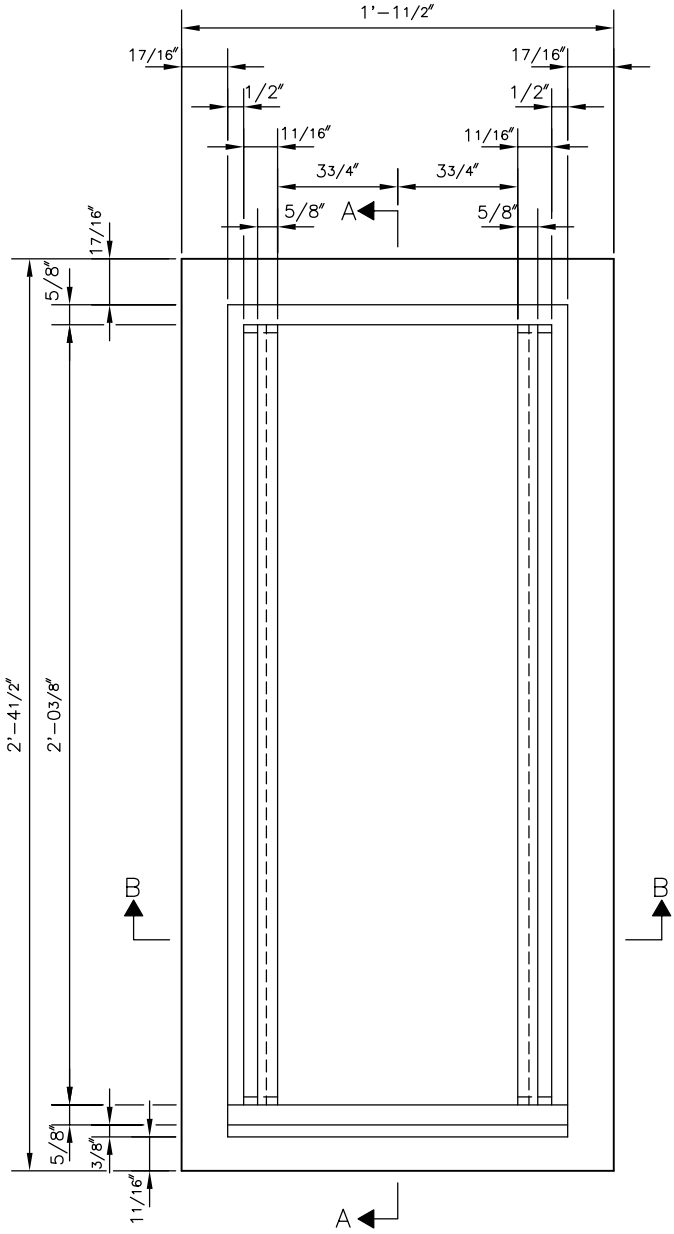

PLAN

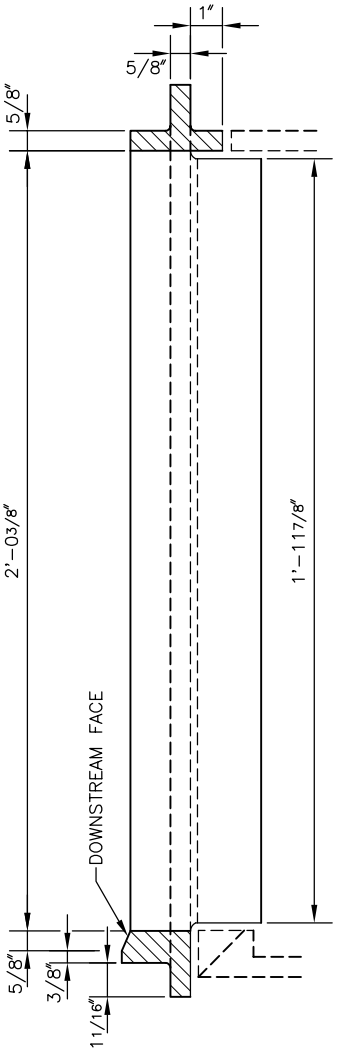

SECTION A–A

THESE DIMENSIONS MAY BE CHANGED IF NECESSARY TO FIT EXISTING CASTINGS

REF STD SPEC SEC 9-05

City of Seattle	NOT TO SCALE	EXTENSION FOR INLET

REV DATE: 2003

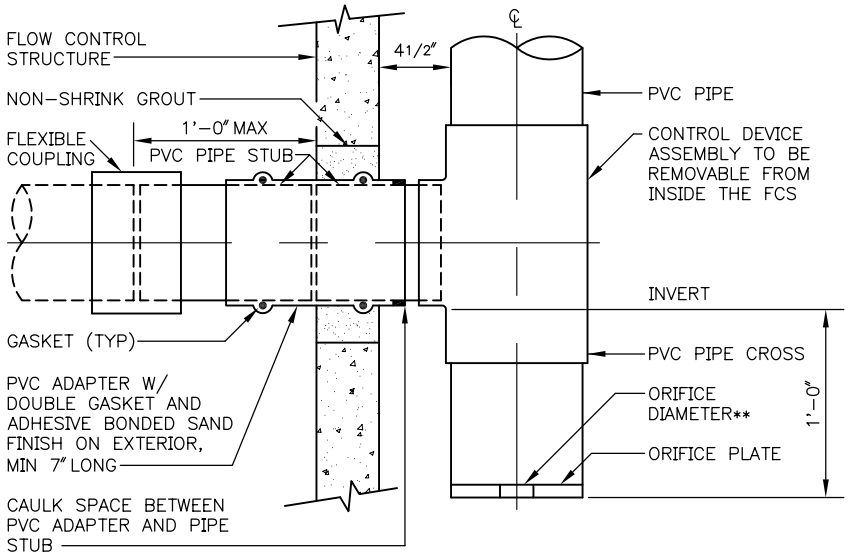

CONNECTION & CONTROL DEVICE
DETAIL A

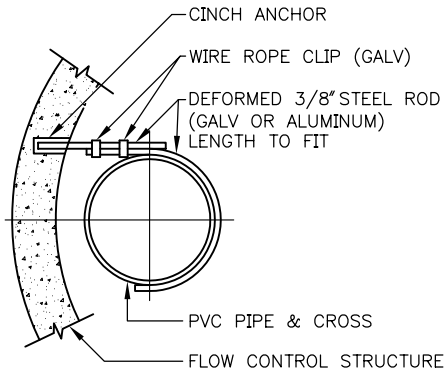

PIPE SUPPORT
DETAIL B

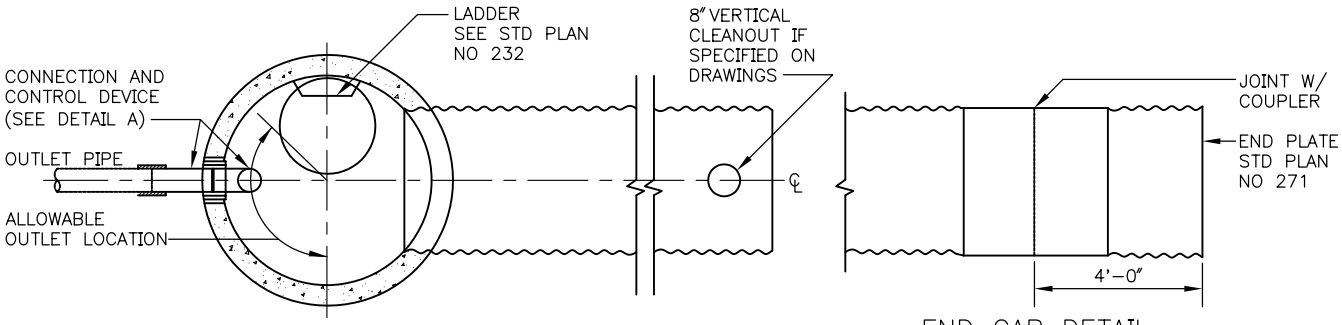

END CAP DETAIL
(WHEN REQUIRED)

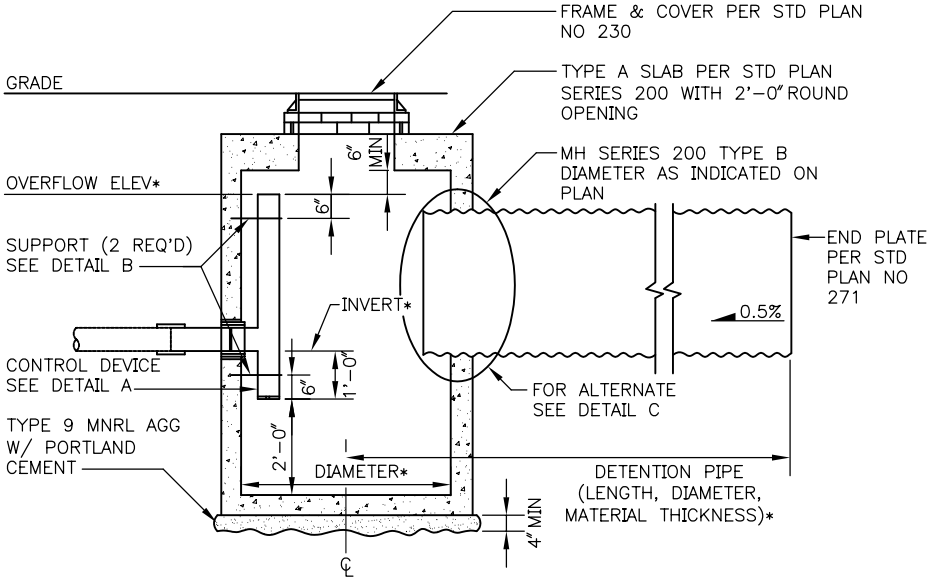

FLOW CONTROL STRUCTURE & DETENTION PIPE

*SPECIFIC DESIGN INFORMATION AS INDICATED ON CONSTRUCTION DRAWINGS
NOTE – INVERT OF DETENTION PIPE HIGHER THAN INVERT OF OUTLET PIPE

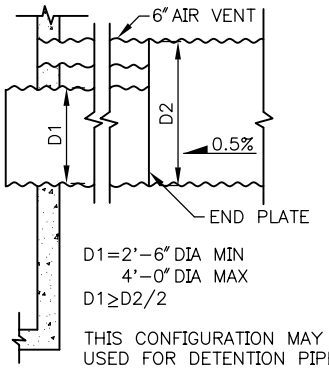

D1=2'-6" DIA MIN
4'-0" DIA MAX
D1≥D2/2

THIS CONFIGURATION MAY BE USED FOR DETENTION PIPES LARGER THAN 3'-0" DIA. USE CONFIGURATION SHOWN ON CONSTRUCTION DRAWING PROFILE

DETAIL C

REF STD SPEC SEC 7-16

City of Seattle	NOT TO SCALE	FLOW CONTROL STRUCTURE

REV DATE: 2003

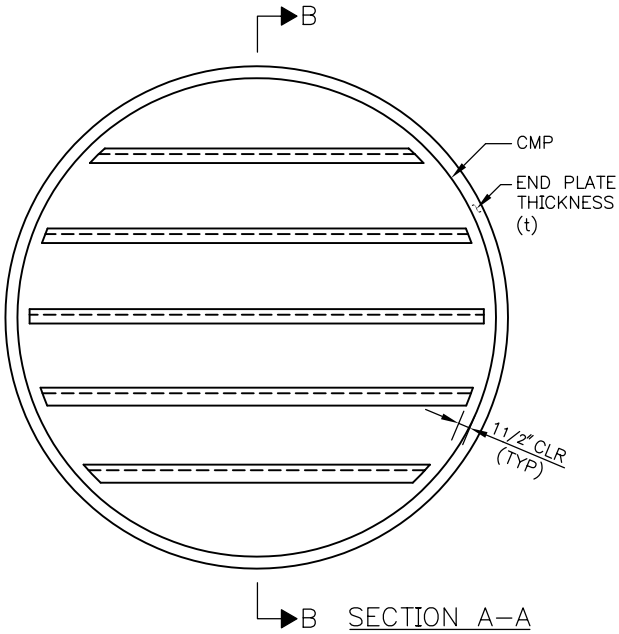

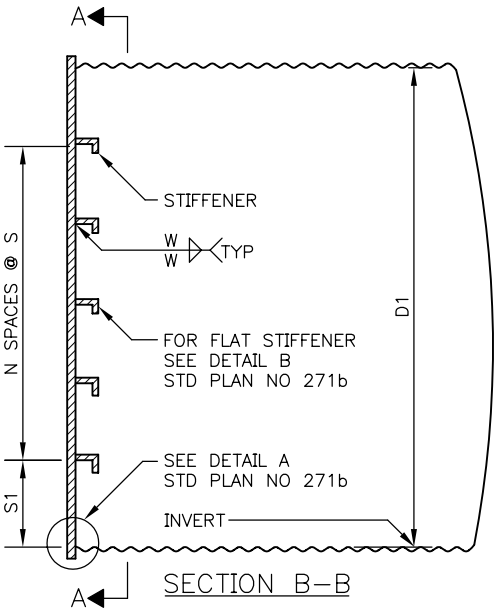

TYPE A

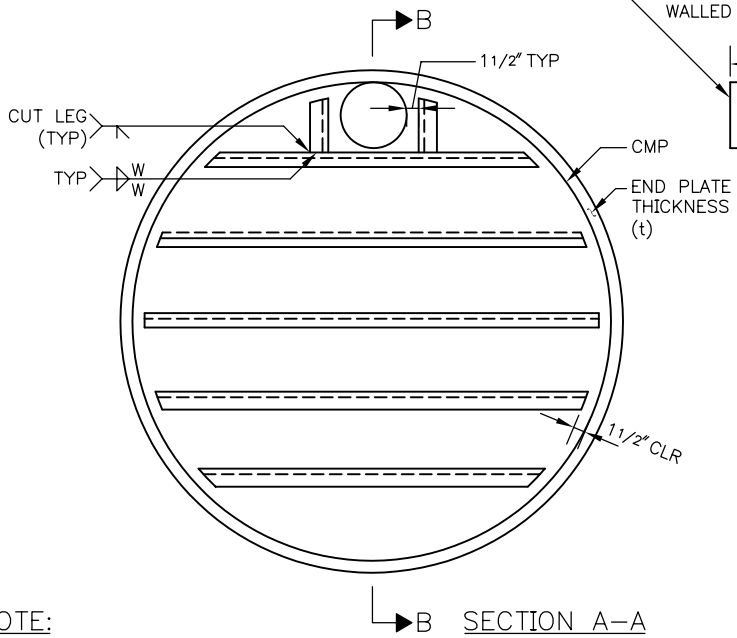

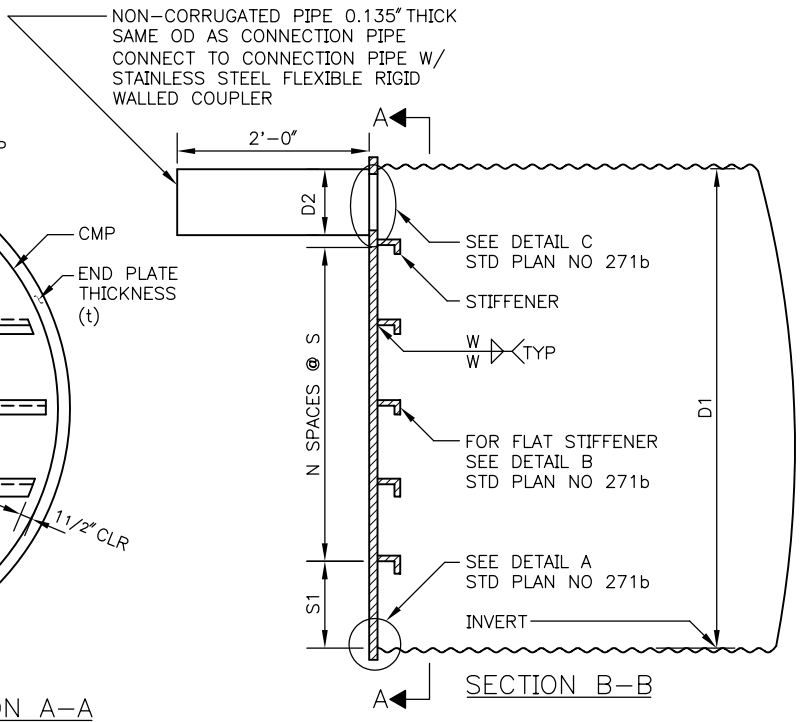

TYPE B

NOTE:
FOR D1, D2, t, S, S1, N & W VALUES AND GENERAL NOTES SEE STD PLAN NO 271c

REF STD SPEC SEC 7-16

City of Seattle	NOT TO SCALE	DETENTION STRUCTURE END PLATE DETAILS

REV DATE: 2003

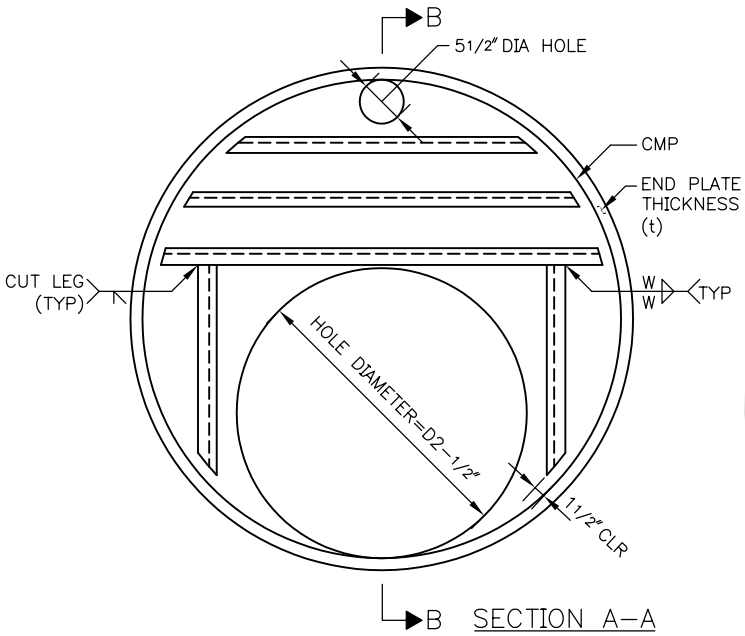

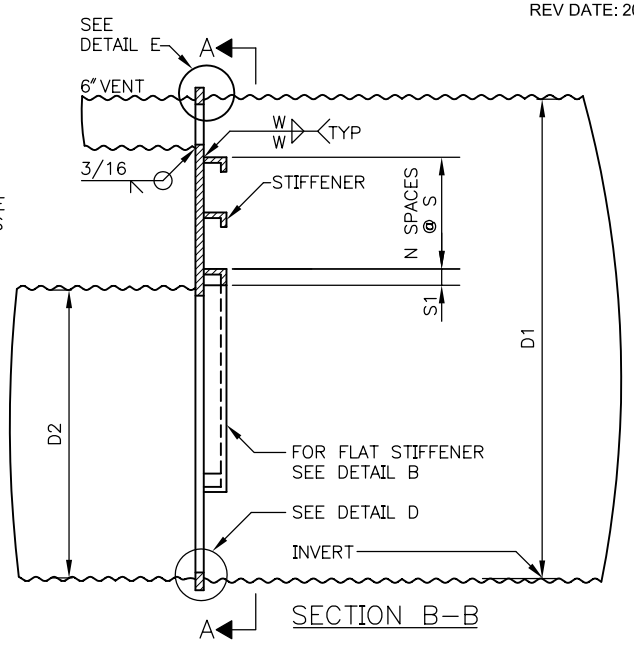

NOTE:
FOR D1, D2, t, S, S1, N & W VALUES AND GENERAL NOTES SEE STD PLAN NO 271c

TYPE C

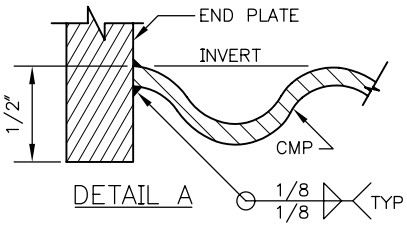

DETAIL A

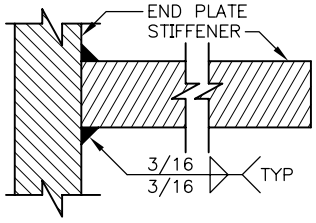

DETAIL B
FLAT STIFFENER

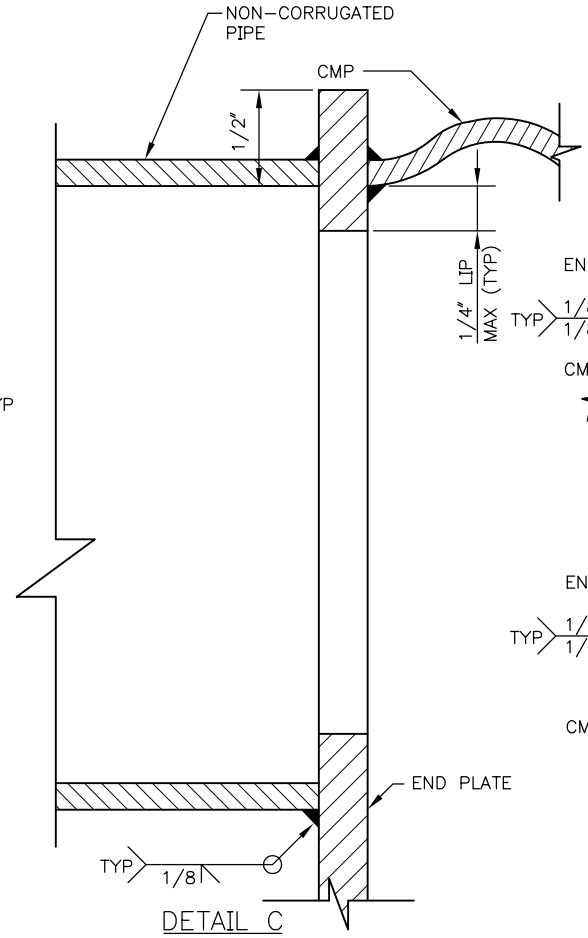

DETAIL C

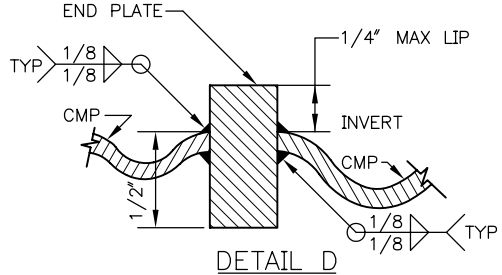

DETAIL D

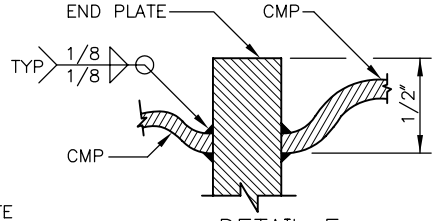

DETAIL E

REF STD SPEC SEC 7-16

City of Seattle	NOT TO SCALE	DETENTION STRUCTURE END PLATE DETAILS

REV DATE: 2003

PIPE DIAMETER		END PLATE THICKNESS	STIFFENER TYPE & SIZE	STIFFENER SPACING			SIZE W
D1	D2	t		S1	S	N	
TYPE A							
30″	–	1/4″	FLAT 2 1/2″ X 1/4″	6″	6″	3	3/16″
36″	–	1/4″	FLAT 3″ X 1/4″	6″	6″	4	3/16″
48″	–	1/4″	FLAT 4 1/4″ X 1/4″	8″	8″	4	3/16″
60″	–	3/8″	L 2 1/2″ X 2″ X 3/8″	10″	10″	4	1/4″
72″	–	3/8″	L 3″ X 3″ X 3/8″	6″	10″	6	1/4″
TYPE B							
30″	6″	1/4″	FLAT 2 1/2″ X 1/4″	5 1/2″	5 1/2″	3	3/16″
	8″			5″	5″	3	
	12″			4″	6″	2	
36″	6″	1/4″	FLAT 3″ X 1/4″	6″	5 1/2″	4	3/16″
	8″			6″	5″	4	
	12″			5 1/2″	5 1/2″	3	
48″	6″	1/4″	FLAT 4 1/4″ X 1/4″	8″	8″	4	3/16″
	8″			6″	8″	4	
	12″			4″	7 1/2″	4	
60″	6″	3/8″	L 2 1/2″ X 2″ X 3/8″	7″	9″	5	1/4″
	8″			10″	10″	4	
	12″			6″	10″	4	
72″	6″	3/8″	L 3″ X 3″ X 3/8″	8″	8″	7	1/4″
	8″			8″	9″	6	
	12″			8″	10″	5	
TYPE C							
48″	30″	1/4″	FLAT 4 1/4″ X 1/4″	2″	8″	1	3/16″
60″	36″	3/8″	L 2 1/2″ X 2″ X 3/8″	2″	7″	2	1/2″
72″	36″	3/8″	L 2″ X 3″ X 3/8″	3″	8 1/2″	3	1/4″

NOTES:

1. DESIGNS VALID FOR PIPE INSTALLED WITH 6'–0″ OR LESS OF COVER FROM CROWN OF PIPE TO GRADE. MAXIMUM WATER SURCHARGE 3'–0″ ABOVE CROWN OF PIPE
2. END PLATE MATERIAL: ALUMINUM 6061–T6
3. DESIGNS SHALL BE USED ONLY FOR ALUMINUM CMP

REF STD SPEC SEC 7-16

City of Seattle	NOT TO SCALE	DETENTION STRUCTURE END PLATE DETAILS

REV DATE: 2003

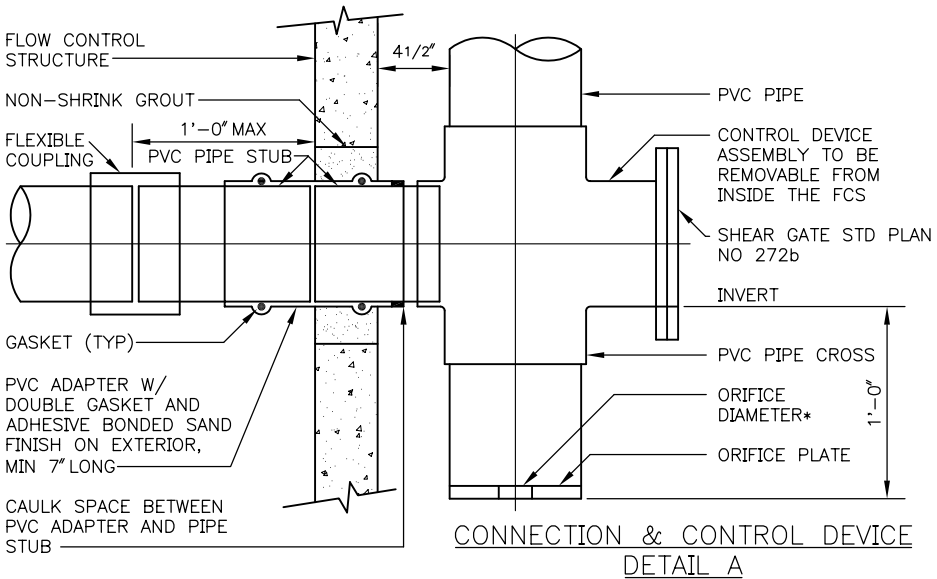

CONNECTION & CONTROL DEVICE
DETAIL A

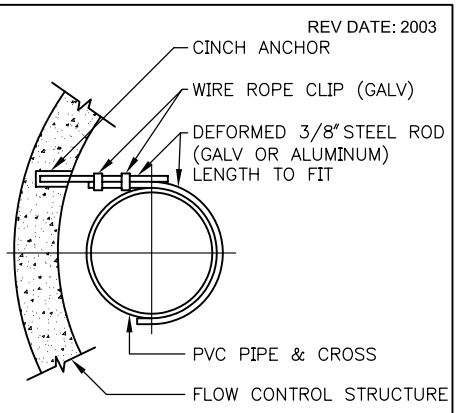

PIPE SUPPORT
DETAIL B

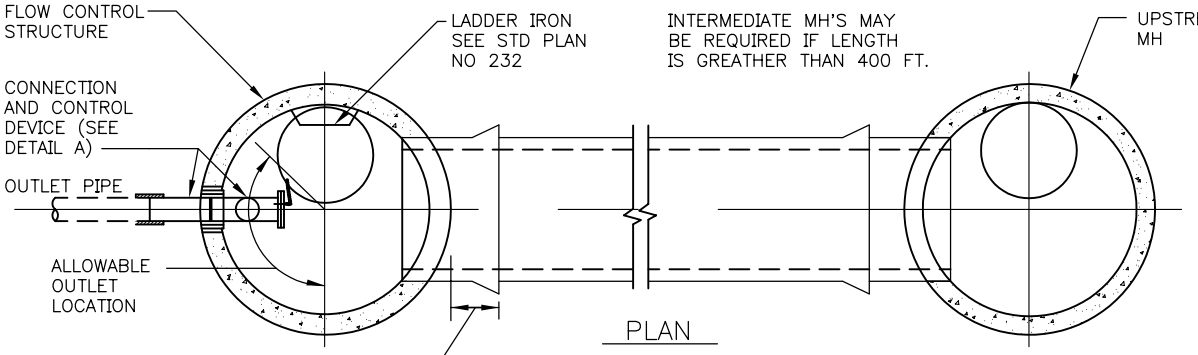

PLAN

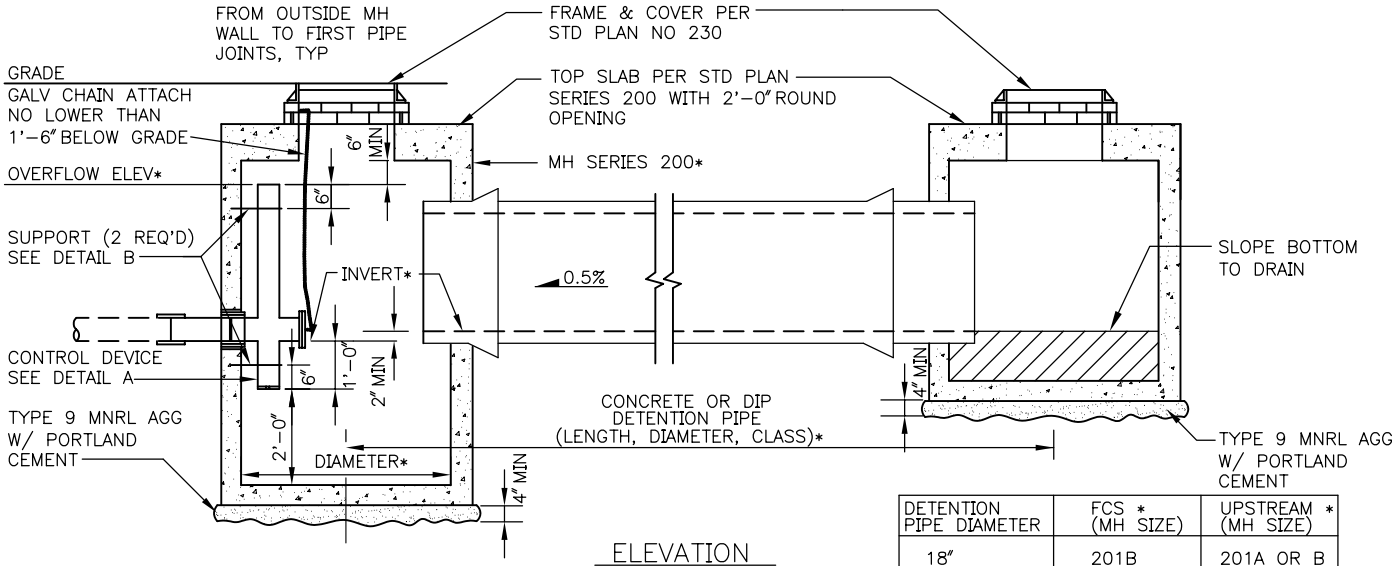

ELEVATION

FLOW CONTROL STRUCTURE & DETENTION PIPE

DETENTION PIPE DIAMETER	FCS * (MH SIZE)	UPSTREAM * (MH SIZE)
18"	201B	201A OR B
24"	201B	201A OR B
30"	202B	202B
36"	202B	202B
48"	203B	203B
60"	204B	204B
72"	205B	205B

*SPECIFIC DESIGN INFORMATION AS INDICATED ON CONSTRUCTION DRAWINGS

REF STD SPEC SEC 7-16

City of Seattle	NOT TO SCALE	FLOW CONTROL STRUCTURE (CONC OR DIP DETENTION PIPE)

REV DATE: 2003

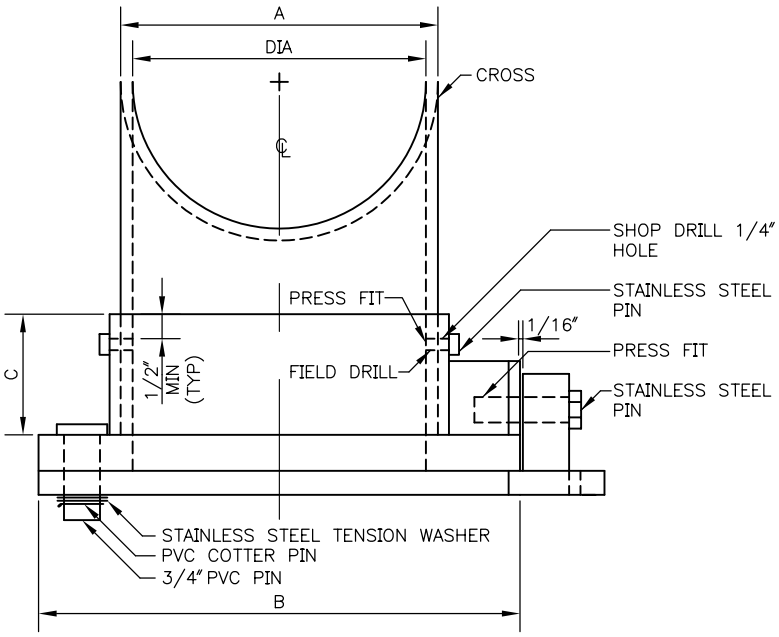

TOP VIEW

DIA	A	B*	C*
4″	4 1/2″	8″	2″
6″	6 5/8″	10″	2 1/2″
8″	8 5/8″	12″	3″
10″	10 3/4″	14″	3″
12″	12 3/4″	16″	3″

*MINIMUM

DIA=OUTLET PIPE DIAMETER

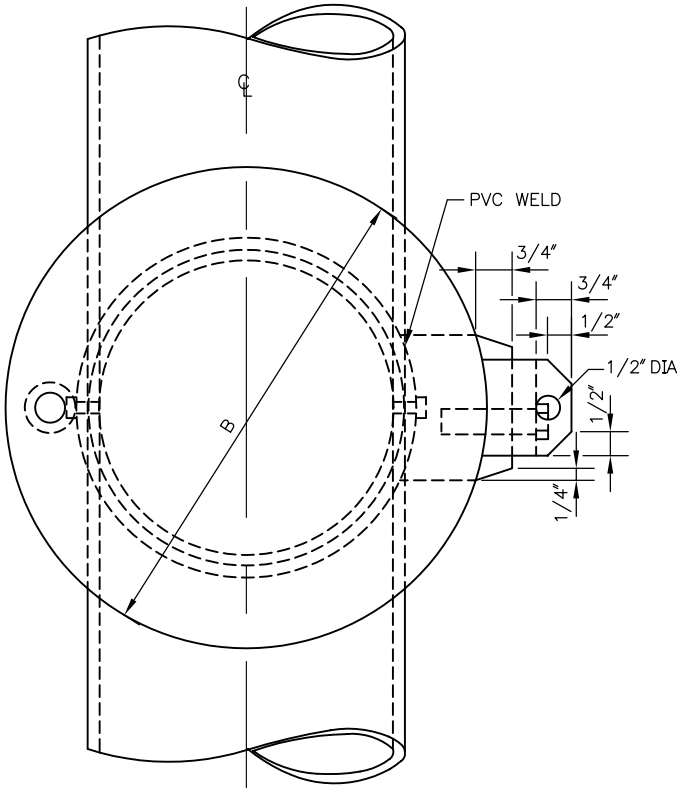

FRONT VIEW

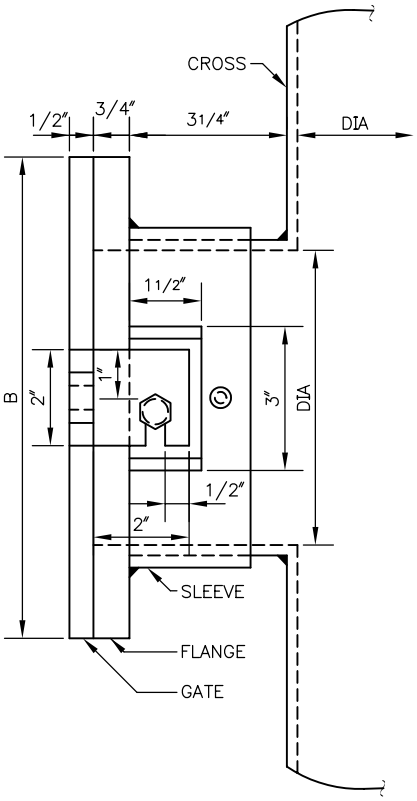

SIDE VIEW

REF STD SPEC SEC 7-16

City of Seattle	NOT TO SCALE	PVC SHEAR GATE

REV DATE: 2003

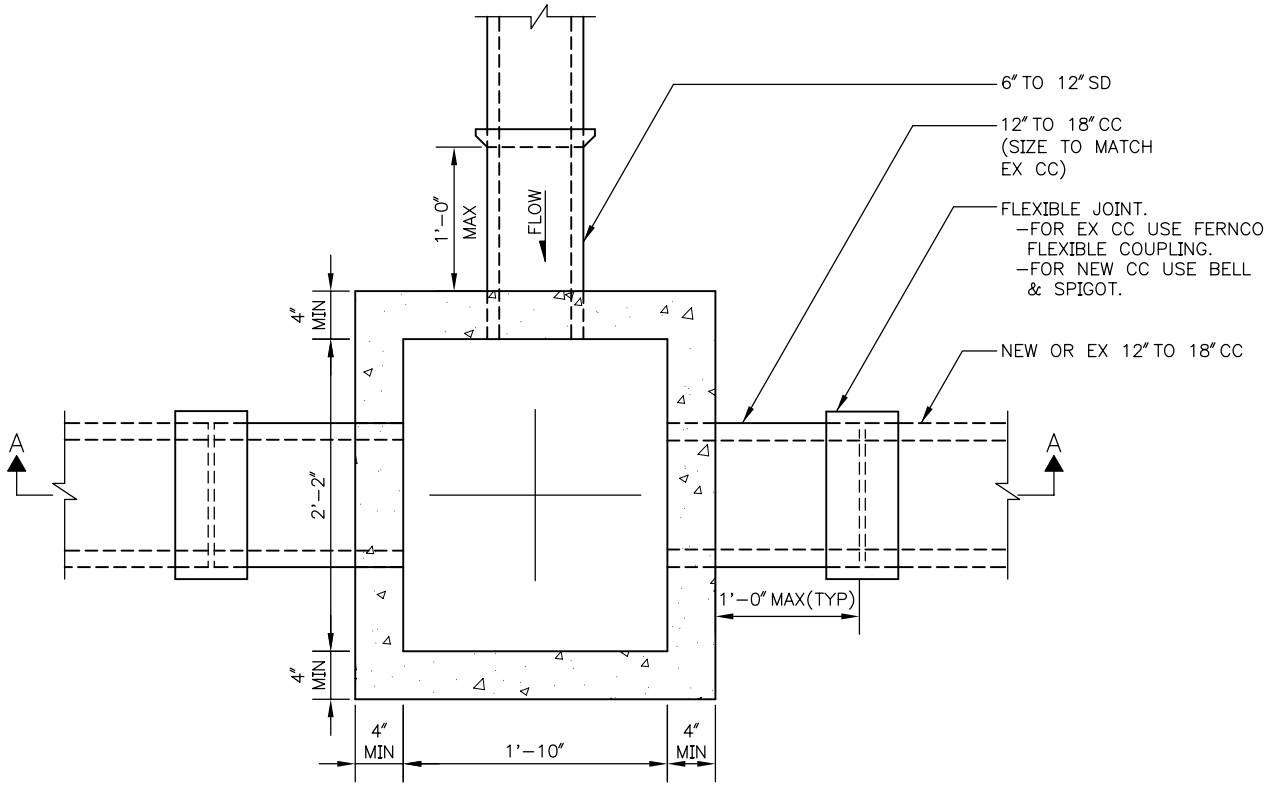

PLAN

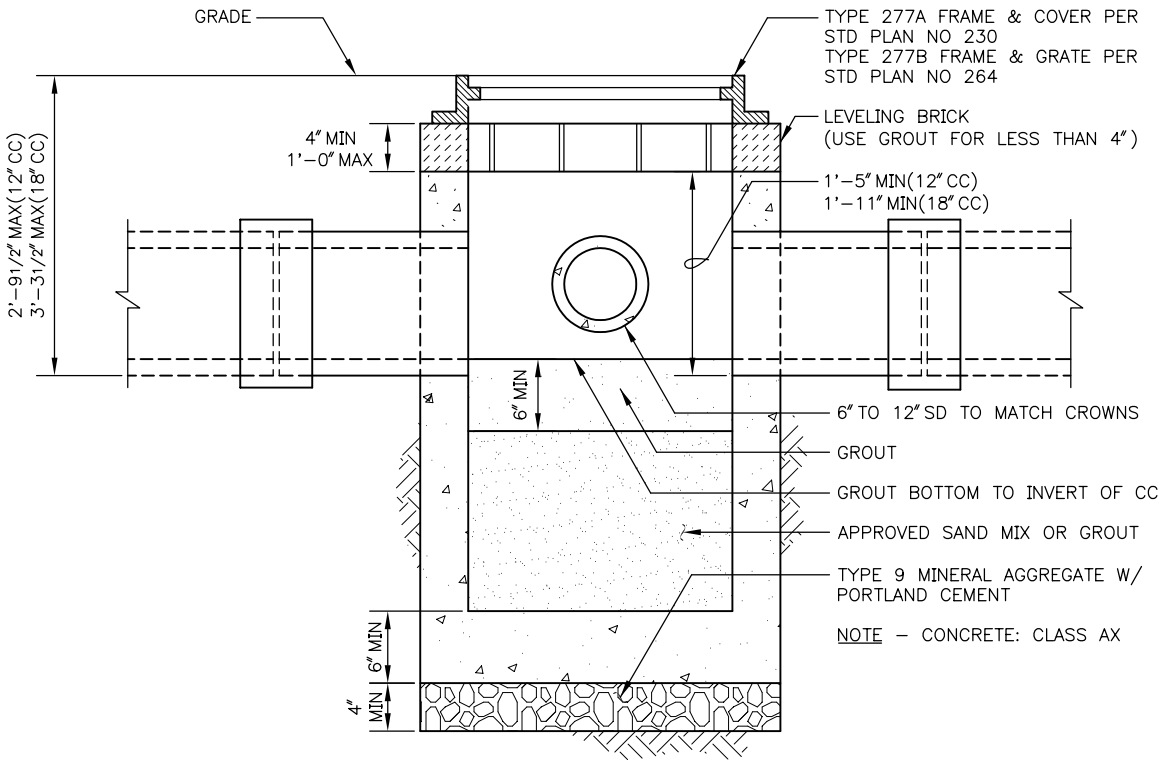

SECTION
A–A

REF STD SPEC SEC 7-02 & 9-12.9

City of Seattle	NOT TO SCALE	TYPE 277 JUNCTION BOX & INSTALLATION

REV DATE: 2003

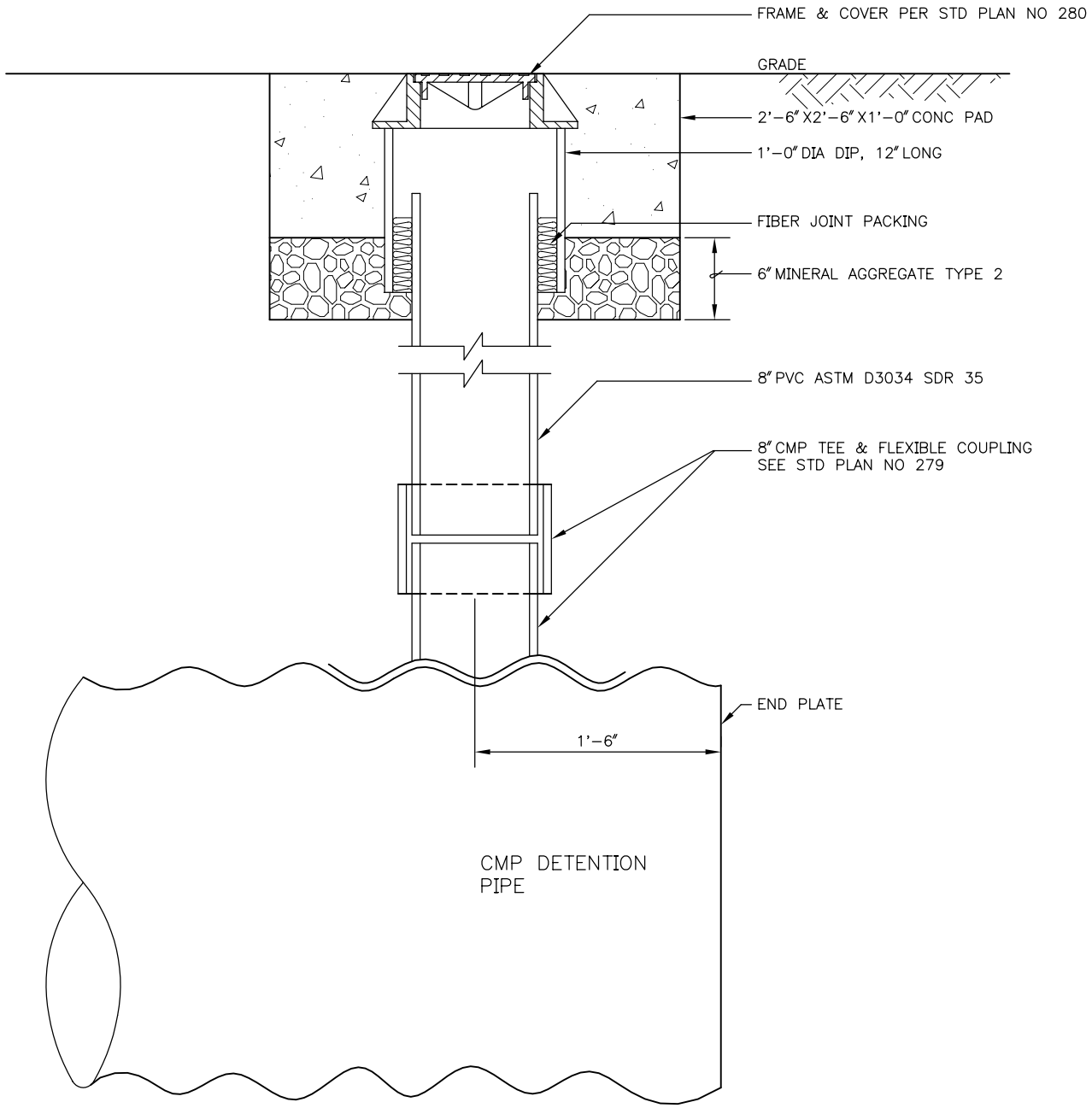

REF STD SPEC SEC 7-19 & 7-16.2

City of Seattle	NOT TO SCALE	VERTICAL CLEAN OUT/ CORRUGATED METAL PIPE

REV DATE: 2005

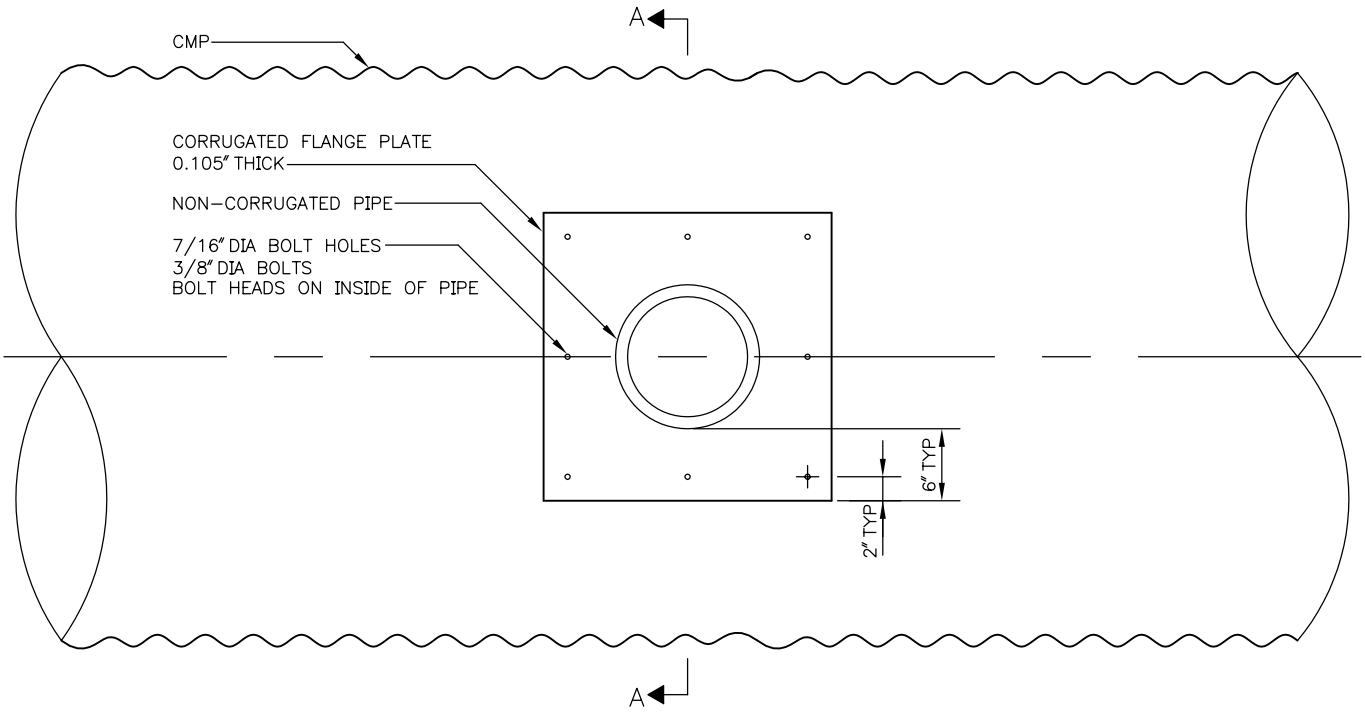

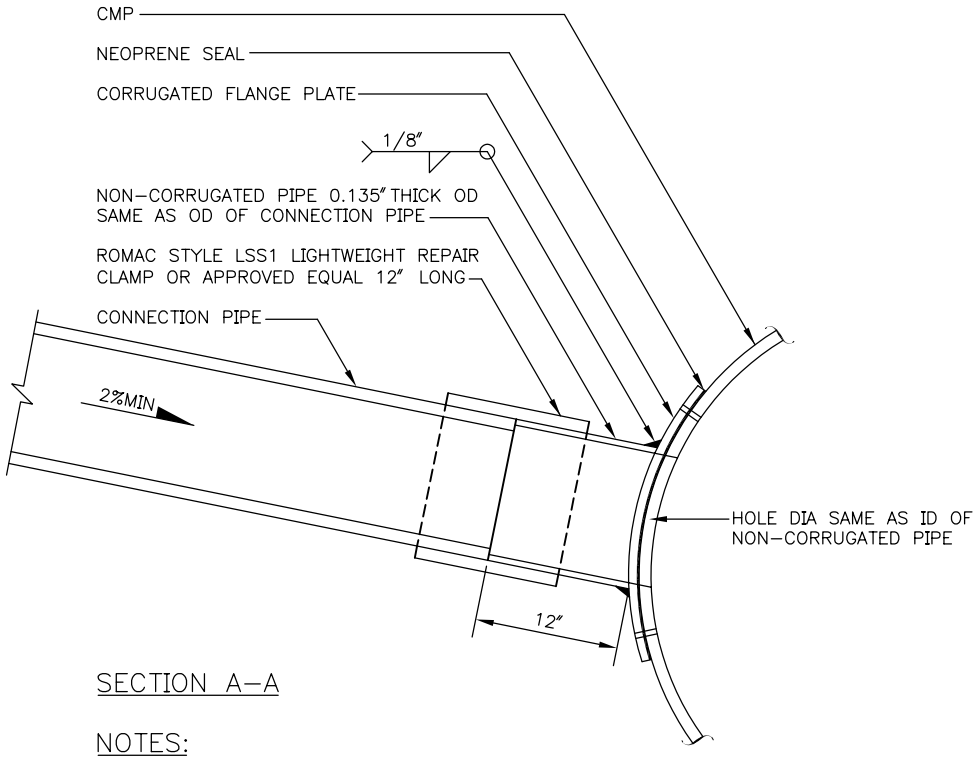

SECTION A–A

NOTES:

1. CORRUGATED FLANGE PLATE AND NON-CORRUGATED PIPE TO BE SAME MATERIAL AND HAVE SAME COATING AS CMP
2. BOLTS TO BE GALV STEEL MEETING ASTM A 307 OR STAINLESS STEEL MEETING ASTM A 193

REF STD SPEC SEC 7-17 & 7-16.2

City of Seattle	NOT TO SCALE	TEE INSTALLATION CORRUGATED METAL PIPE

REV DATE: 2003

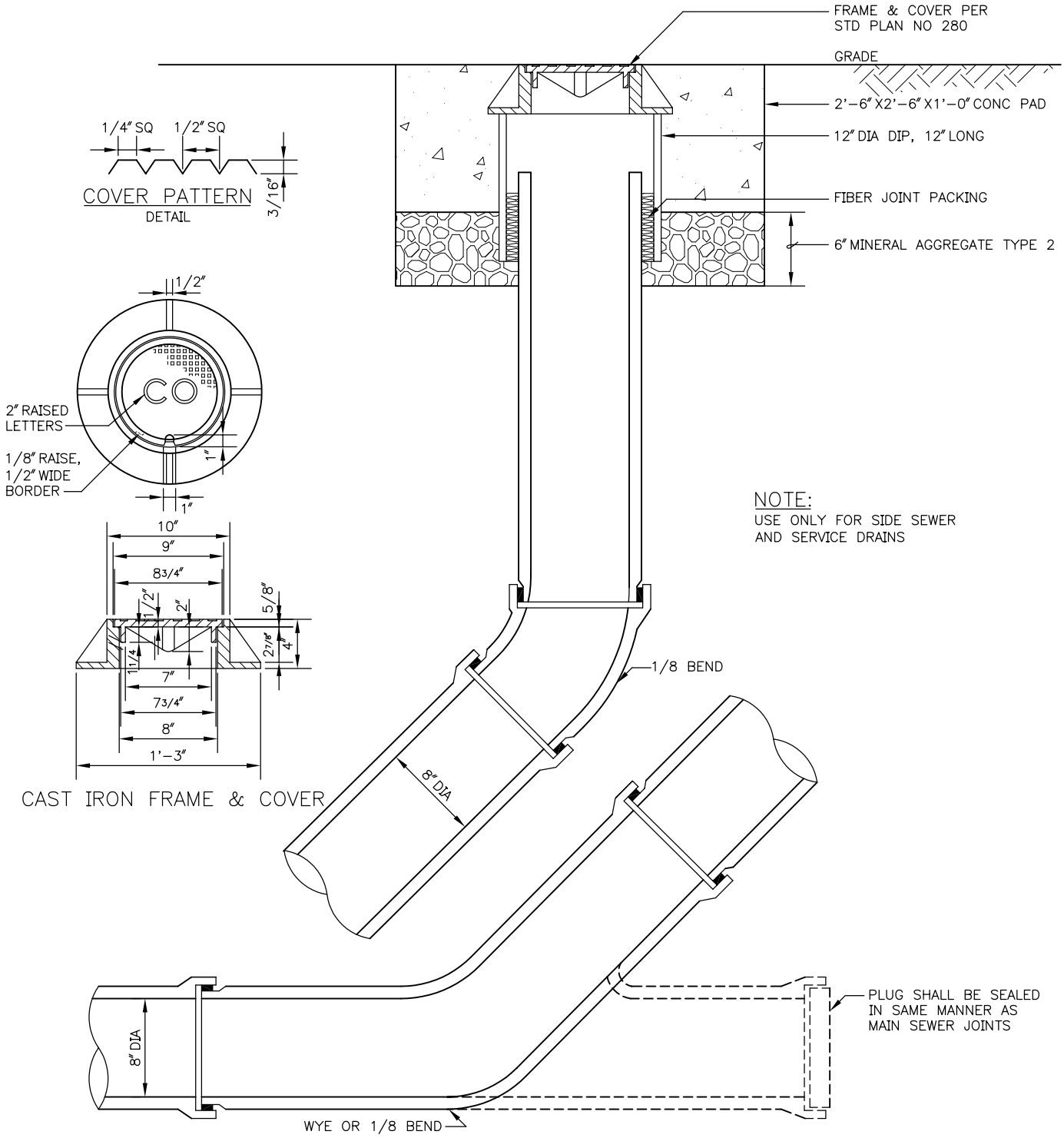

REF STD SPEC SEC 7-19

City of Seattle	NOT TO SCALE	8" CLEAN-OUT

REV DATE: 2003

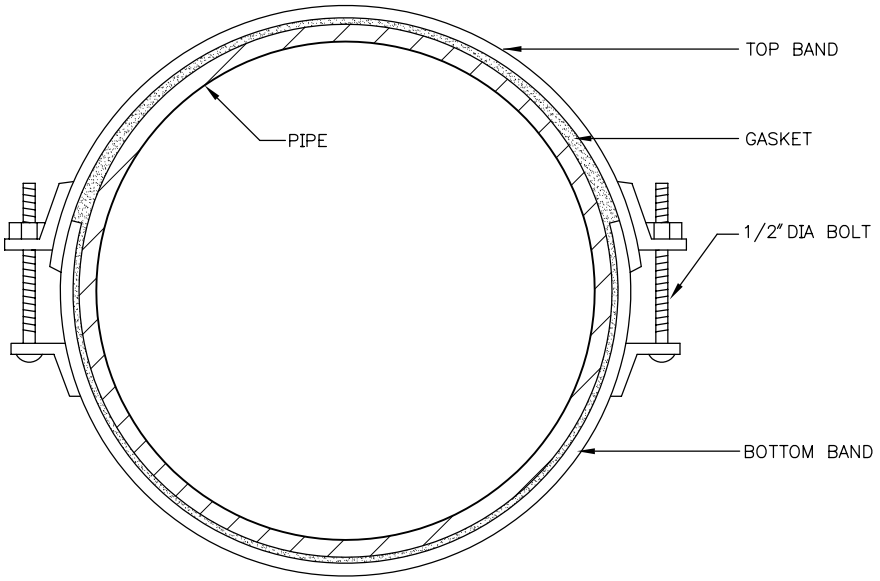

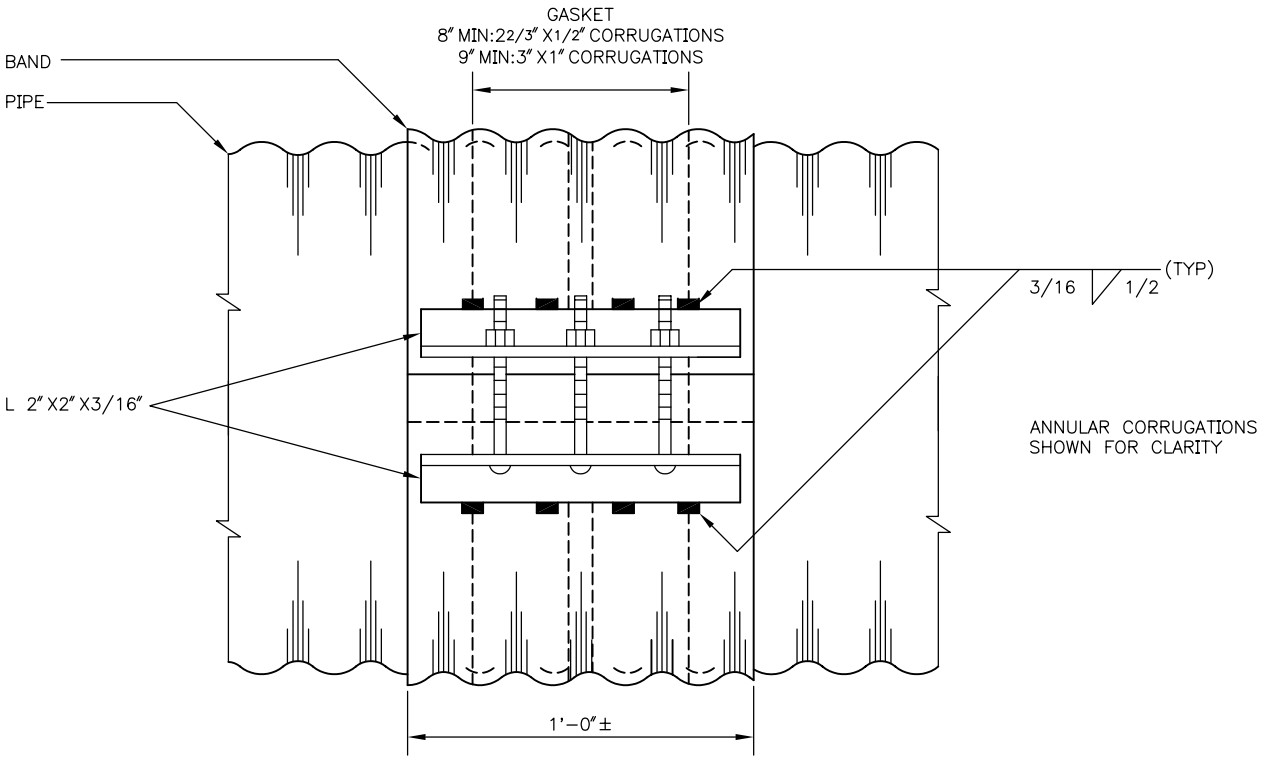

FOR PIPES LESS THAN 48" DIAMETER
(HELICAL OR ANNULAR)

REF STD SPEC SEC 7-16.2 & 9-05

City of Seattle	NOT TO SCALE	CORRUGATED METAL PIPE COUPLING BANDS

REV DATE: 2003

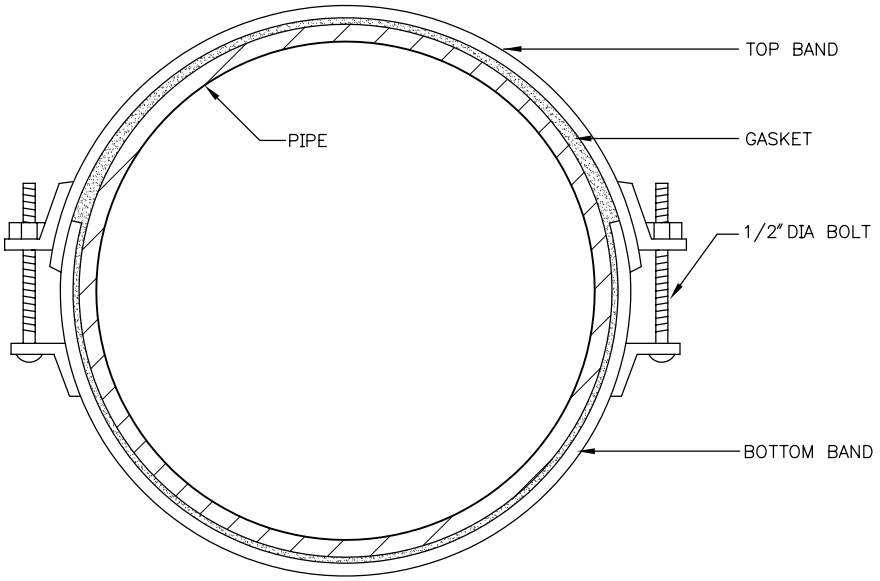

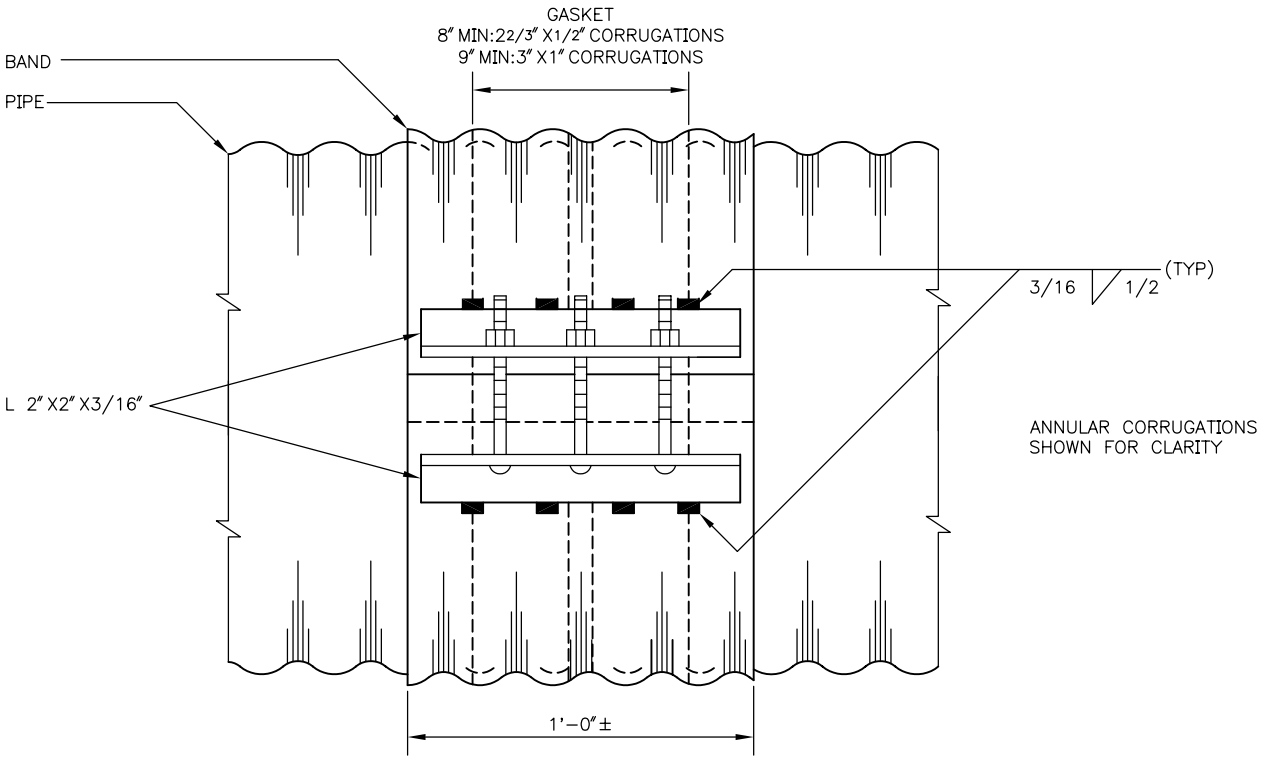

FOR PIPES LESS THAN 48" DIAMETER
(HELICAL OR ANNULAR)

REF STD SPEC SEC 7-16.2 & 9-05

City of Seattle	NOT TO SCALE	CORRUGATED METAL PIPE COUPLING BANDS

REV DATE: 2003

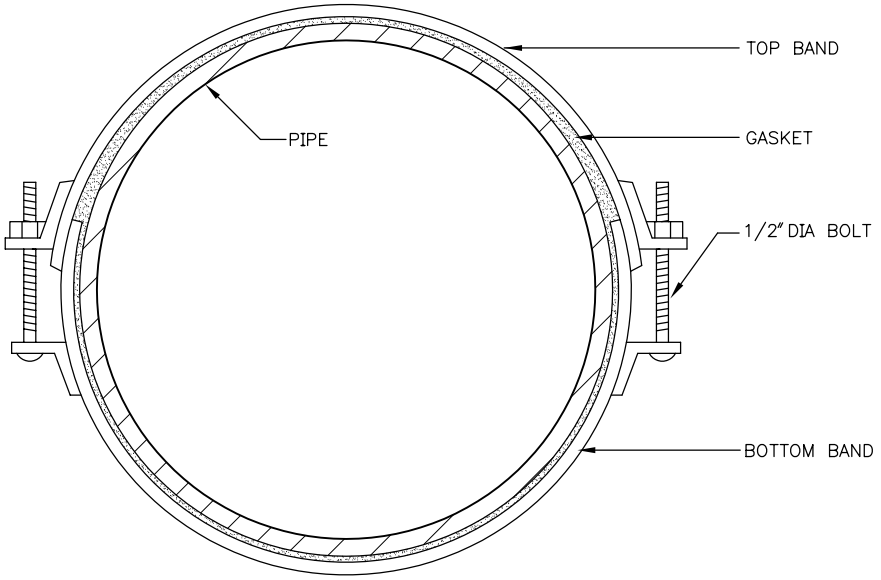

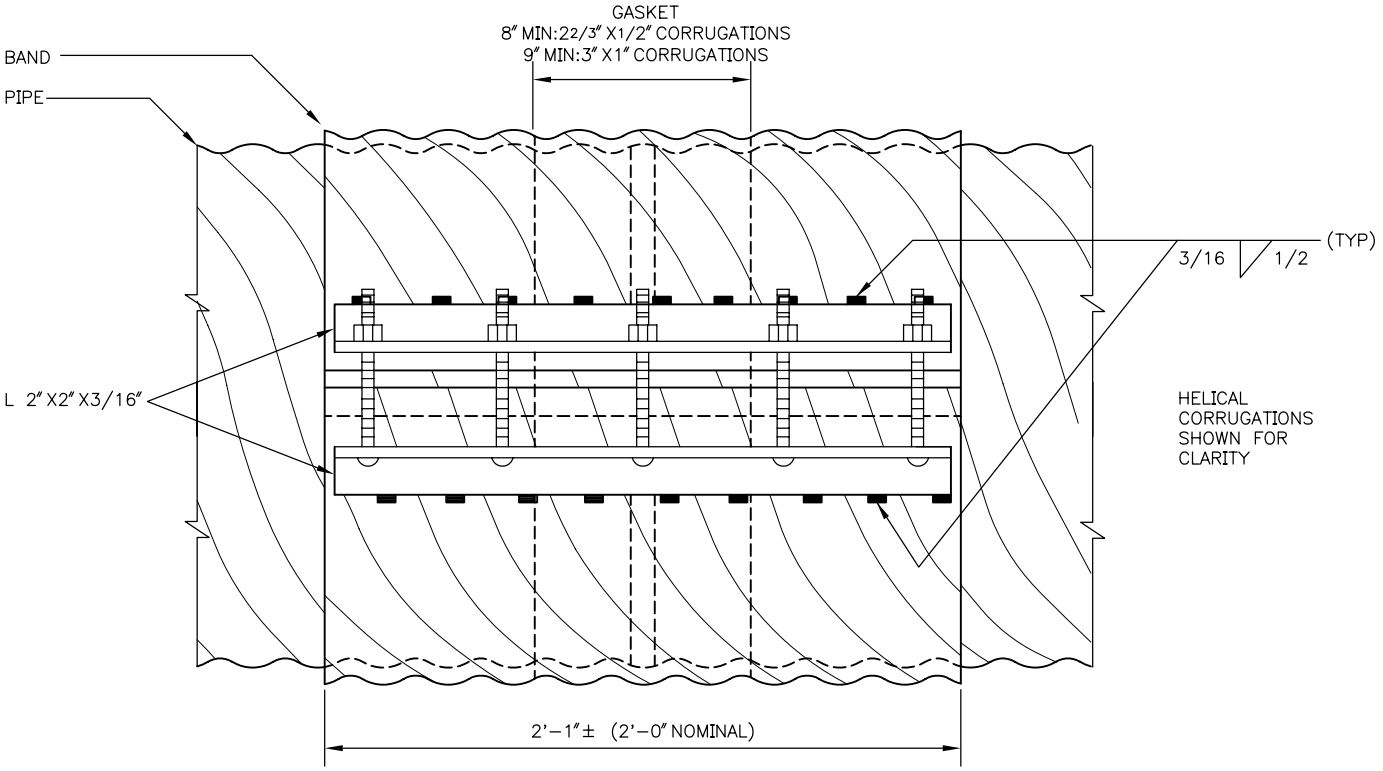

FOR PIPES 48" DIAMETER & LARGER
(HELICAL OR ANNULAR)

REF STD SPEC SEC 7-16.2 & 9-05

City of Seattle	NOT TO SCALE	CORRUGATED METAL PIPE COUPLING BANDS

REV DATE: 2003

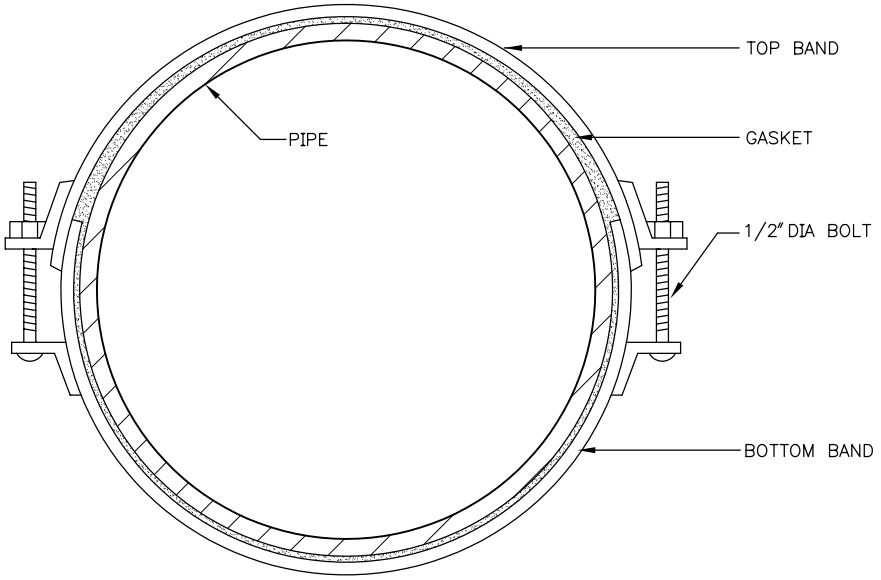

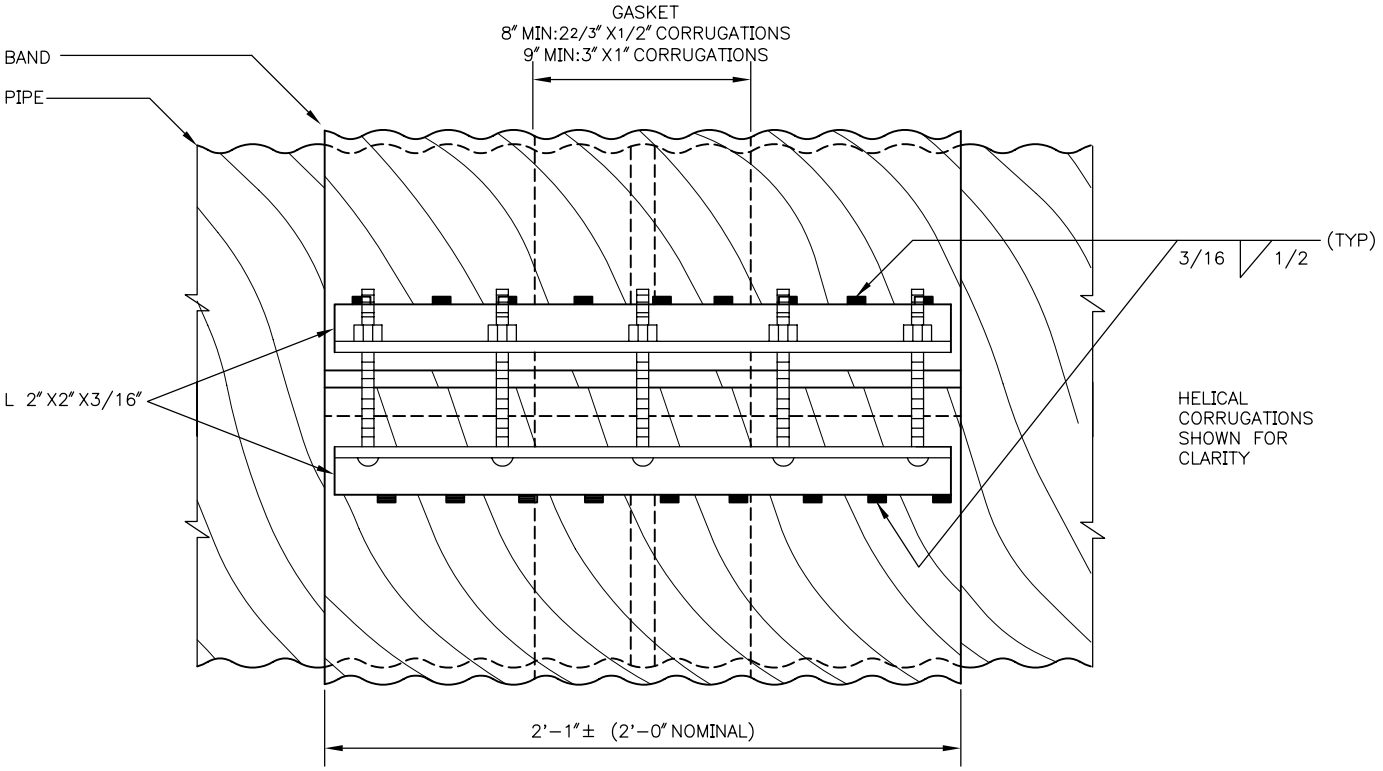

FOR PIPES 48" DIAMETER & LARGER
(HELICAL OR ANNULAR)

REF STD SPEC SEC 7-16.2 & 9-05

City of Seattle	NOT TO SCALE	CORRUGATED METAL PIPE COUPLING BANDS

REV DATE: 2003

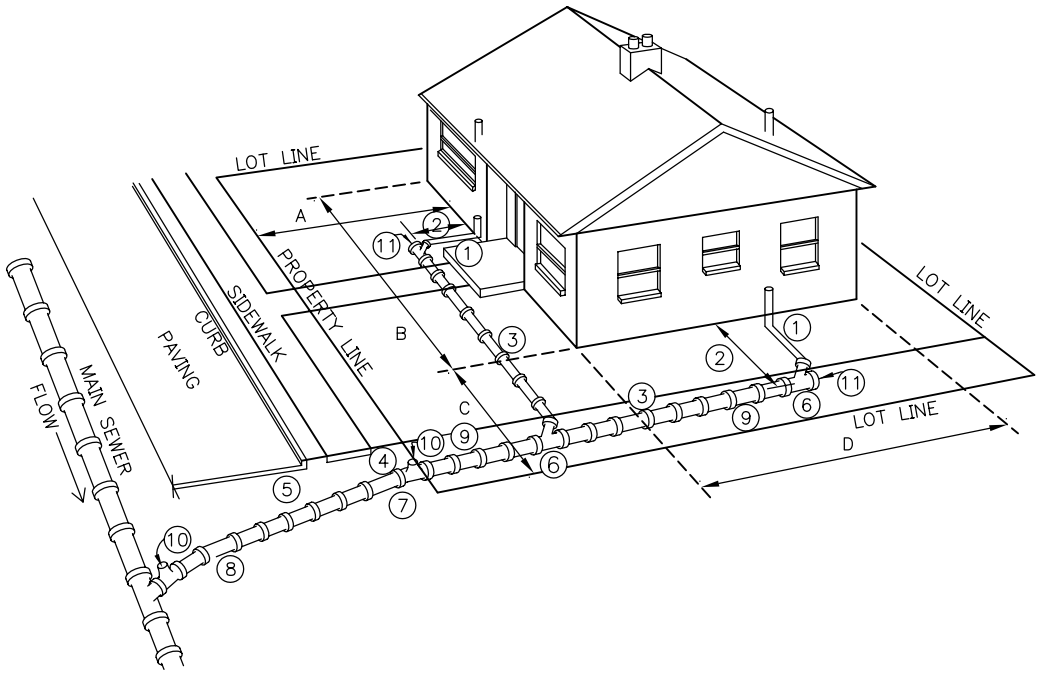

NOTES:

1. ALL HOUSE PLUMBING OUTLETS MUST BE CONNECTED TO THE SEWER. NO DOWNSPOUTS OR STORM DRAINAGE MAY BE CONNECTED, EXCEPT TO A SEPARATE STORM DRAINAGE SYSTEM.
2. 2'–6" MIN DISTANCE FROM HOUSE, EXCEPT FOR SOIL PIPE CONNECTION.
3. 1'–6" MIN COVER OF PIPE.
4. 2'–6" MIN COVER AT PROPERTY LINE.
5. 5'–0" MIN COVER AT CURB LINE.
6. LAY PIPE IN STRAIGHT LINE BETWEEN BENDS. MAKE ALL CHANGES IN GRADE OR LINE WITH BENDS OR WYES.
7. STANDARD 4" TO 6" INCREASER.
8. 6" SEWER PIPE: MIN SIZE IN STREET, AND ELSEWHERE AS DIRECTED. 2% MIN GRADE, 100% MAX.
9. 4" SEWER PIPE: MIN SIZE ON PROPERTY. 2% MIN GRADE, 100% (45°) MAX.
10. TEST "T" WITH PLUG
11. REMOVABLE PLUG.

A. CONSTRUCTION IN STREET MUST BE DONE BY A LICENSED SIDE SEWER CONTRACTOR.
B. ALL CONSTRUCTION SHALL BE IN ACCORDANCE WITH CURRENT SIDE SEWER ORDINANCES.
C. ALL CONSTRUCTION REQUIRES A PERMIT AND PAYMENT OF FEE. COMPLETE LEGAL DESCRIPTIONS OF PROPERTY AND DIMENSIONS A, B, C AND D THAT SHOW THE SIZE AND LOCATION OF THE HOUSE ARE REQUIRED FOR ISSUANCE OF THE PERMIT.
D. ORDINANCE 97016 APPLIES TO INSTALLATION OF SIDE SEWER.

REF STD SPEC SEC 7-18

City of Seattle	NOT TO SCALE	SIDE SEWER INSTALLATION

REV DATE: 2003

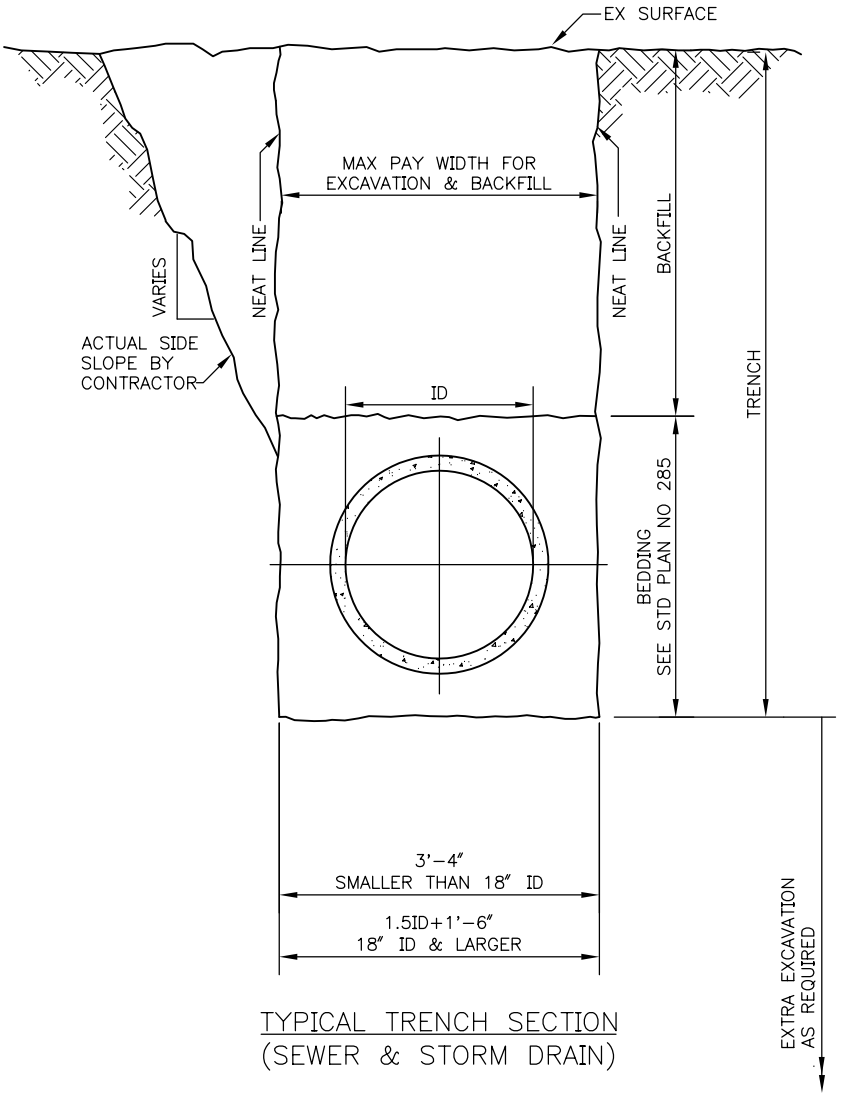

TYPICAL TRENCH SECTION
(SEWER & STORM DRAIN)

NOTE:
FOR PAVEMENT REMOVAL
AND RESTORATION SEE
STD PLAN NO 404

REF STD SPEC SEC 7-17

City of Seattle	NOT TO SCALE	TYPICAL SEWER TRENCH SECTION

REV DATE: 2003

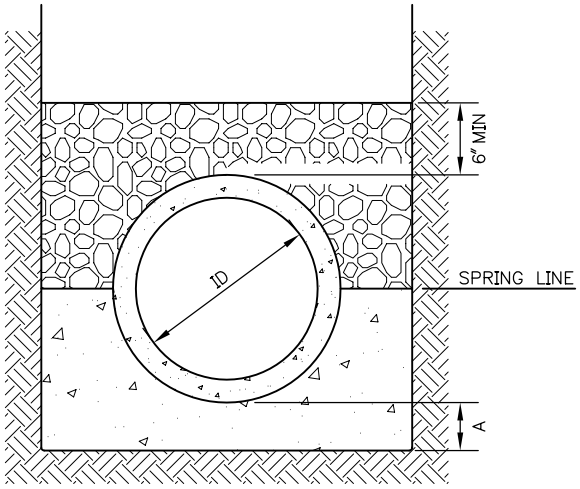

CLASS A BEDDING
(CONCRETE BEDDING)

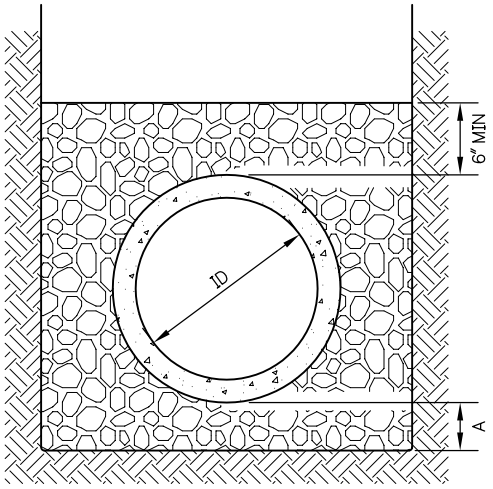

CLASS B BEDDING

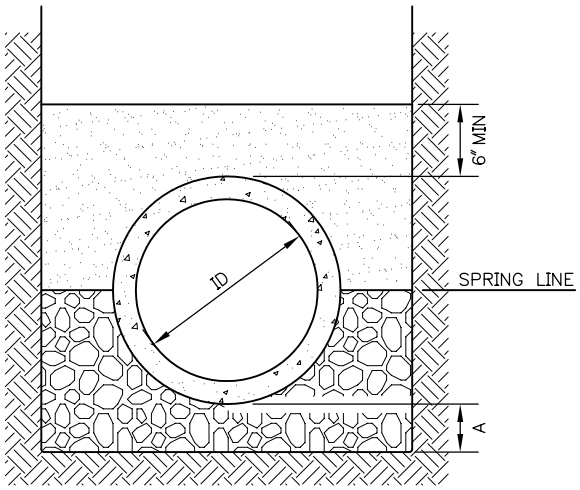

CLASS C BEDDING

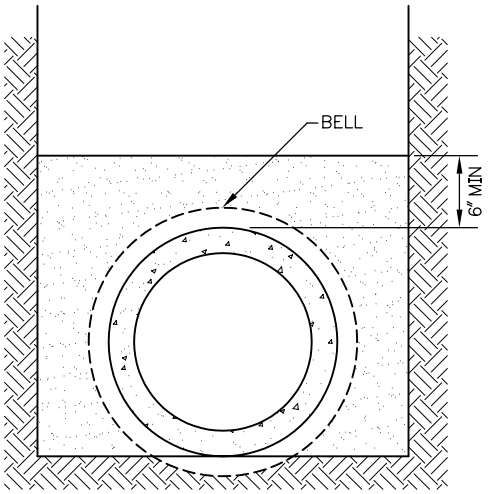

CLASS D BEDDING

MINERAL AGGREGATE PER STD SPEC 4-01
TYPE 9 FOR RIGID PIPE
TYPE 22 FOR FLEXIBLE PIPE

CONCRETE
(4 SACK MIN 1 1/2" MAX AGGREGATE)

SELECTED NATIVE MATERIAL

NOTES:
1. FOR TRENCH WIDTH SEE STD PLAN NO 284
2. A=4" WHEN ID IS LESS THAN 2'-6"
   A=6" WHEN ID IS 2'-6" OR MORE
3. FOR CLASS D BEDDING EXCAVATE FOR BELL

REF STD SPEC SEC 7-17

City of Seattle	NOT TO SCALE	PIPE BEDDING SEWER / STORM DRAIN

REV DATE: 2005

NOTES

1. EXCEPTIONS TO STD PLAN NO. 286 SHALL BE APPROVED BY SEATTLE PUBLIC UTILITIES, WATER QUALITY DIVISION.
2. "SEWER" INCLUDES SANITARY SEWER, COMBINED SEWER AND SIDE SEWER.
3. WHERE MINIMUM CLEARANCES CANNOT BE MET, SEWER SHALL BE CONSTRUCTED OF MATERIALS AND WITH JOINTS THAT ARE EQUIVALENT TO WATER MAIN STANDARDS INCLUDING WATER MAIN PRESSURE TESTING REQUIREMENTS.
4. NO VERTICAL CLEARANCE REQUIRED.
5. IF MINIMUM VERTICAL SEPARATION CANNOT BE MET, WATER MAIN SHALL BE A STANDARD SINGLE 18'–0" NOMINAL LENGTH DUCTILE IRON WATER MAIN SECTION CENTERED AT THE POINT OF CROSSING.
6. SEWER SHALL HAVE ADEQUATE FOUNDATION SUPPORT TO PREVENT SETTLEMENT ON THE WATER MAIN AND TO PREVENT DEFLECTION OF WATER MAIN JOINTS.
7. CROSSINGS AT AN ANGLE BETWEEN 90° AND 45° MAY OCCUR BETWEEN 9'–0" AND 6'–0" OF WATER MAIN JOINT. FOR CROSSINGS LESS THAN 45°, SEE NOTE 1.
8. ORDINANCE 97016 APPLIES TO SIDE SEWERS. SEE STD SPEC SEC 1–07.17(2)A.

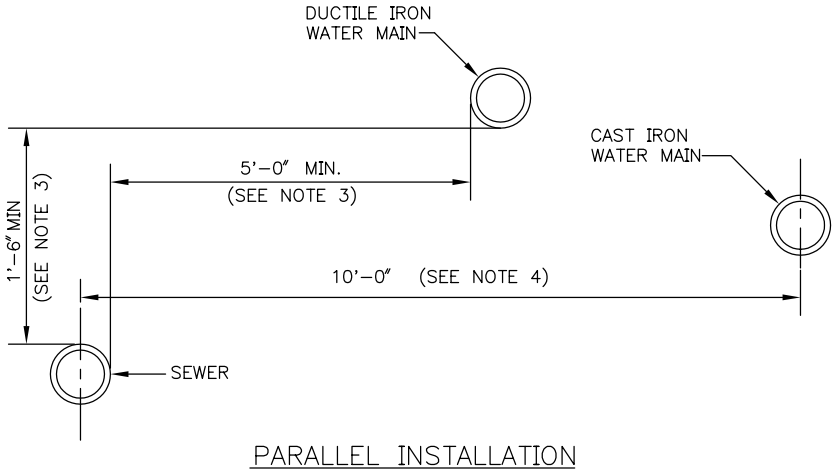

PARALLEL INSTALLATION

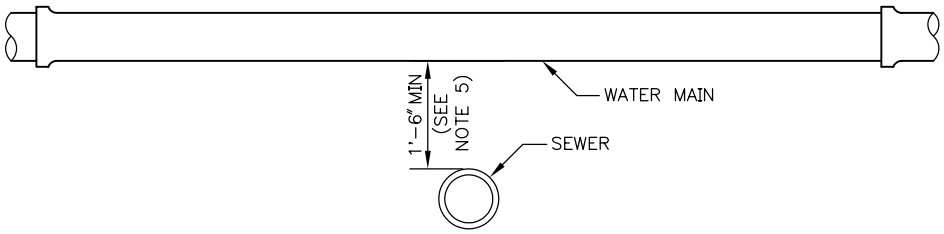

CROSSING WATER OVER SEWER

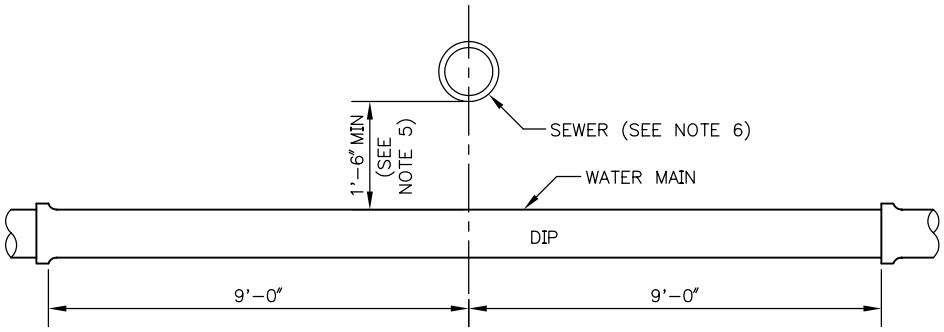

STANDARD SINGLE 18'–0" NOMINAL LENGTH DUCTILE IRON WATER MAIN SECTION CENTERED AT THE POINT OF CROSSING

CROSSING WATER UNDER SEWER

REF STD SPEC SEC 1-07.17 & 7-11

City of Seattle	NOT TO SCALE	SEWER & WATER SPACING & CLEARANCES

REV DATE: 2003

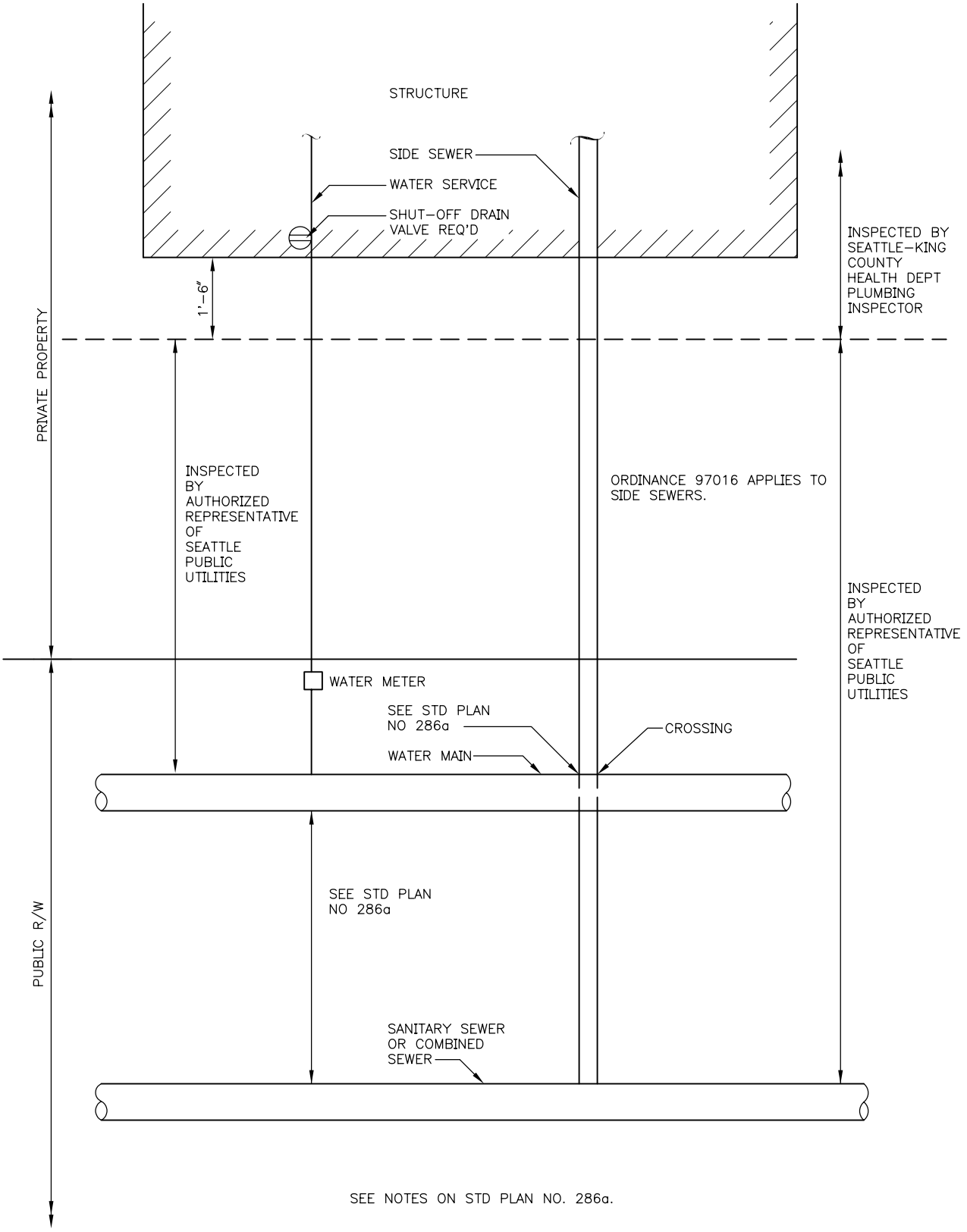

SEE NOTES ON STD PLAN NO. 286a.

REF STD SPEC SEC 1-07.17 & DIV 7

City of Seattle	NOT TO SCALE	SEWER & WATER SPACING & CLEARANCES

REV DATE: 2003

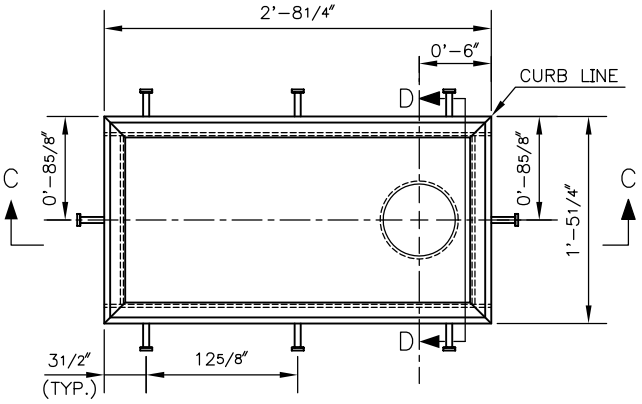

PLAN VIEW – BRIDGE DRAIN

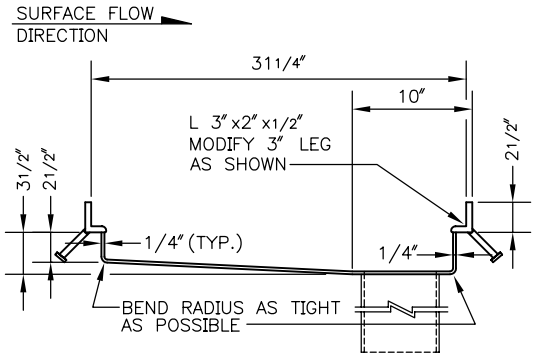

SECTION C–C

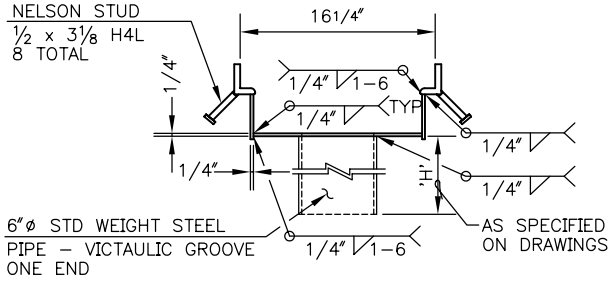

SECTION D–D

NOTES:

1. ALL 1/4" STEEL & L3"x 2"x 1/2" TO BE A–36.
2. 6"ø PIPE TO BE STANDARD WEIGHT STEEL.
3. AFTER FABRICATION, DRAIN ASSEMBLY TO BE HOT DIP GALVANIZED.
4. VANED GRATE TO BE PER STD PLAN NO 265.

REF STD SPEC SEC 6-01 & 6-02

City of Seattle	NOT TO SCALE	BRIDGE DRAIN

REV DATE: 2005

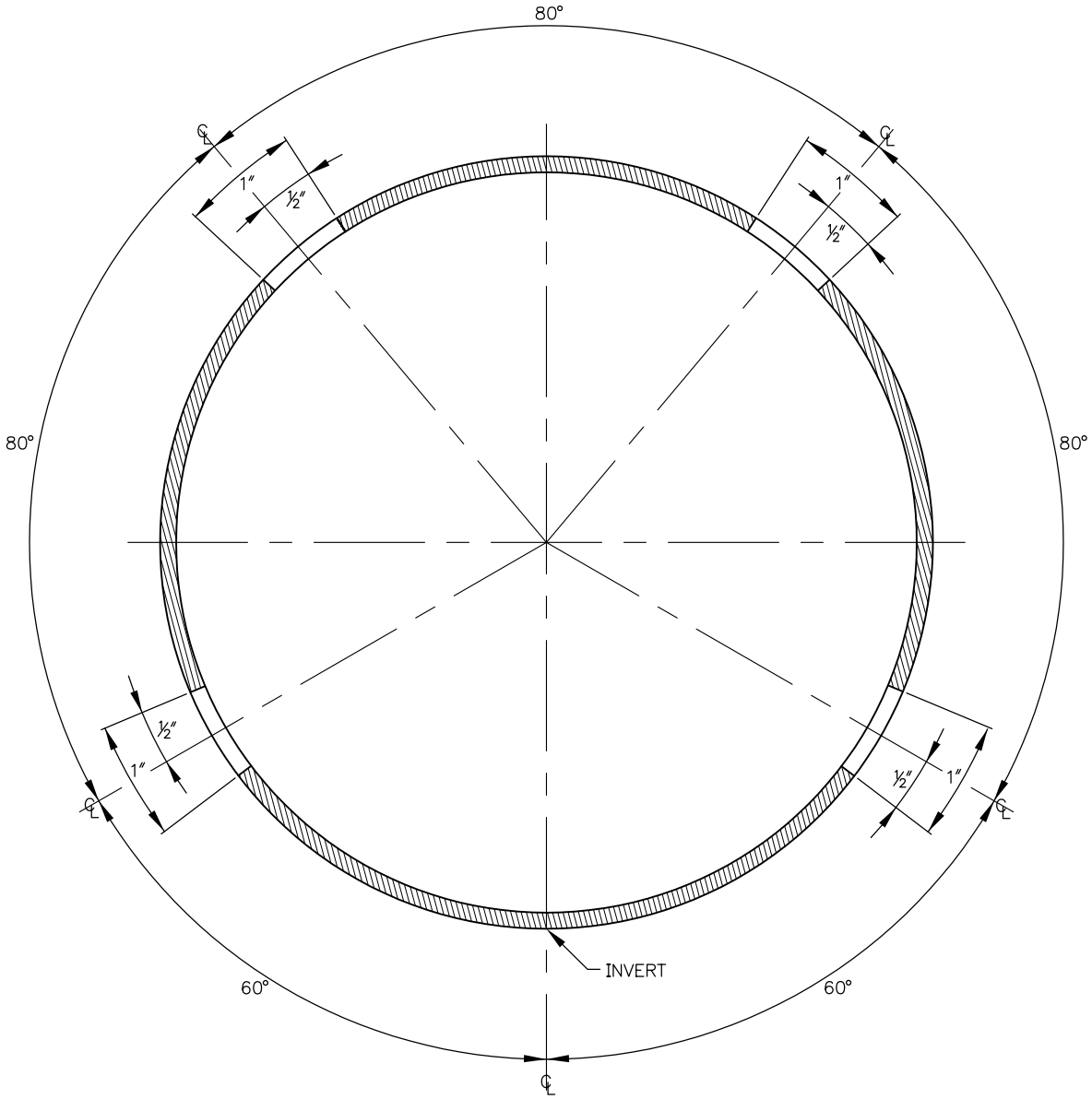

NOTES:
1. ASTM D 2241 SDR 21 CLASS 200 PVC PIPE.
2. SLOT DIMENSIONS ARE 0.040″ WIDE X 1.00″ LONG SPACED ALONG PIPE AT 0.25″ ON CENTER

REF STD SPEC SEC 9-05 .3(1)

City of Seattle	NOT TO SCALE	PVC SUBSURFACE DRAIN PIPE