REV DATE: 2008

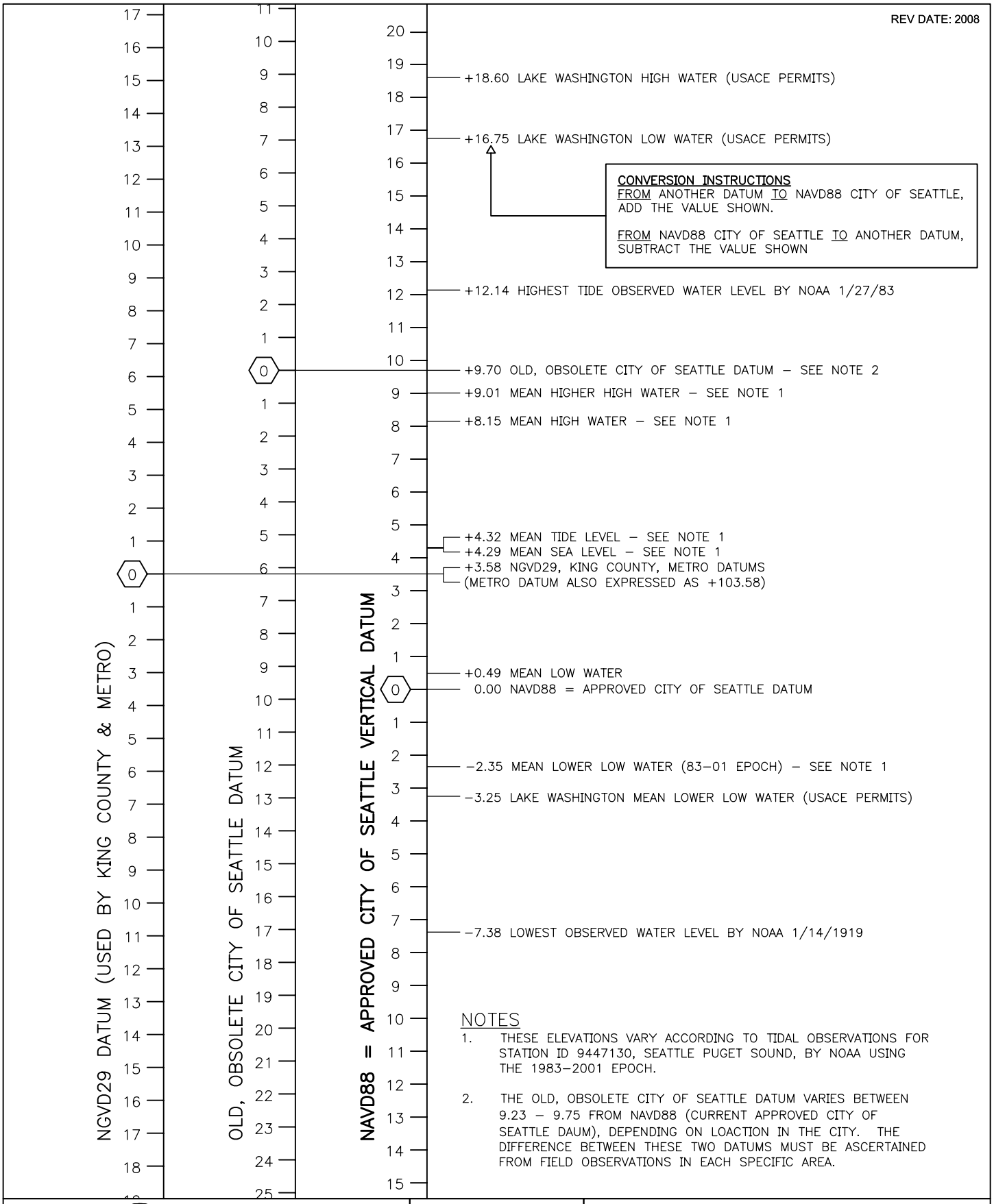


NOTES

1. THESE ELEVATIONS VARY ACCORDING TO TIDAL OBSERVATIONS FOR STATION ID 9447130, SEATTLE PUGET SOUND, BY NOAA USING THE 1983–2001 EPOCH.

2. THE OLD, OBSOLETE CITY OF SEATTLE DATUM VARIES BETWEEN 9.23 – 9.75 FROM NAVD88 (CURRENT APPROVED CITY OF SEATTLE DAUM), DEPENDING ON LOACTION IN THE CITY. THE DIFFERENCE BETWEEN THESE TWO DATUMS MUST BE ASCERTAINED FROM FIELD OBSERVATIONS IN EACH SPECIFIC AREA.

| City of Seattle | NOT TO SCALE | ELEVATIONS & DATUMS |
|---|---|---|

REV DATE: 2008

| | |
|---|---|
| ABAN | Abandon(ed) |
| ABW | Asphalt Bike Way |
| ACV | Automatic Control Valve |
| ACP | Asphalt Concrete Pavement |
| ADA | Americans with Disabilities Act |
| ADJ | Adjust |
| AHD | Ahead |
| AIC | Aerial Interconnect Cable |
| AL | Aluminum |
| AP | Angle Point |
| APP | Approved |
| APPROX | Approximate |
| APWA | American Public Works Association |
| ASPH | Asphalt |
| ATB | Asphalt Treated Base |
| AV | Air Valve |
| AVB | Automatic Vacuum Breaker |
| AVE | Avenue |
| AVG | Average |
| AW | Asphalt Walk |
| AWG | American Wire Gage |
| AWWA | American Water Works Assoc.. |
| B&B | Ball & Burlap |
| BC | Bolt Circle, Back of Curb |
| BF | Bottom Face |
| BFV | Butterfly Valve |
| BK | Back |
| BLDG | Building |
| BLK | Block |
| BLKG | Blocking |
| BLKHD | Bulkhead |
| BLRD | Bollard |
| BLVD | Boulevard |

| | |
|---|---|
| BM | Bench Mark |
| BO | Blow Off |
| BOC | Beginning of Curb |
| BPD | Backflow Prevention Device |
| BR | Bare Root, Brick |
| BRG | Bearing |
| BRKN | Broken |
| BSMT | Basement |
| BTW | Between |
| BV | Ball valve |
| BVC | Beginning of Vertical Curve |
| C&G | Curb & Gutter |
| CAL | Caliper |
| CB | Cable, Catch Basin |
| CBW | Concrete Bike Way |
| C–C | Center to Center |
| CC | Concrete Culvert |
| CD | Conduit |
| CDF | Controlled Density Fill |
| CEM | Cement |
| CF | Cubic Feet |
| CH | Chamber |
| CIP | Cast Iron Pipe |
| CL | Center Line or Class |
| ℄ | Center Line |
| CLF | Chain Link Fence |
| CLR | Clearance |
| CMP | Corrugated Metal Pipe |
| CO | Clean Out |
| COMP | Compression |
| CONC | Concrete |
| COND | Condition |
| CONN | Connect/Connection |

REF STD SPEC SEC 1-01.2

| | | |
|---|---|---|
| City of Seattle | NOT TO SCALE | ABBREVIATIONS |

REV DATE: 2008

| | |
|---|---|
| CONSTR | Construction |
| CONT | Continuous |
| CORP | Corporation |
| COS | City of Seattle |
| CR | Cross, Curb Radius |
| CSB | Chief Seattle Base |
| CULV | Culvert |
| DW | Concrete Walk |
| CY | Cubic Yard |
| DB | Direct Burial Cable |
| DC | Direct Current |
| DCVA | Double Check Valve Assembly |
| DEPT | Department |
| DGV | District Gate Valve |
| DIA ø | Diameter |
| DIP or DI | Ductile Iron Pipe |
| DIPRA | Ductile Iron Pipe Research Assoc. |
| DR | Drive |
| DS | Downspout |
| DWG | Drawing |
| DWY | Driveway |
| E | East |
| EA | Each |
| ECB | Electrical Cable |
| ECC | Eccentric |
| ECD | Electrical Conduit |
| ED | Electrical Duct |
| EL/ELEV | Elevation |
| ELEC | Electric/Electrical |
| EMH | Electrical Manhole |
| ENCL | Enclosure |
| ENGR | Engineer |
| EOC | End of Curb |

| | |
|---|---|
| EQ | Equal |
| EASL | Equivalent Single Axle Loads |
| ESMT | Easement |
| EV | Electrical Vault |
| EVC | End of Vertical Curb |
| EW | Each Way |
| EX | Existing |
| ECP | Expansion |
| FACB | Fire Alarm Cable |
| FAHH | Fire Alarm Handhole |
| FC | Face of Curb |
| FCS | Flow Control Structure |
| FDN | Foundation |
| FF | Far Face, Finished Floor |
| FG | Finished Grade |
| FIG | Figure |
| FIPT | Female Iron Pipe Thread |
| FLG | Flange |
| FLR | Floor |
| FLT | Flat Bar |
| FM | Force Main |
| FO or FOC | Fiber Optics |
| FS | Far Side |
| FT | Feet |
| FTG | Footing |
| G | Gas |
| G REG | Gas Regulator |
| GA | Gauge |
| GAL | Gallon |
| GALV | Galvanize/Galvanized |
| GAS V | Gas Valve |
| GFCI | Ground Fault Circuit Interrupter |
| GIP | Galvanized Iron Pipe |

REF STD SPEC SEC 1-01.2

| | | |
|---|---|---|
| City of Seattle | NOT TO SCALE | ABBREVIATIONS |

| | |
|---|---|
| GM | Gas Meter |
| GND | Ground |
| GP | Guy Pole |
| GPM | Gallons Per Minute |
| GR | Grade |
| GRHH | Ground Rod Handhole |
| GS | Gas Service |
| GSP | Galvanized Steel Pipe |
| GV | Gate Valve |
| GVC | Gate Valve Chamber |
| GVL | Gravel |
| HMA | Hot Mix Asphalt |
| HB | Horizontal Bend |
| HEX | Hexagon/Hexagonal |
| HGL | Hydraulic Grade Line |
| HH | Handhole |
| HI | High |
| HORIZ | Horizontal |
| HPG | High Pressure Gas |
| HPS | High Pressure Sodium |
| HR | Hour |
| HSE | House |
| HT | Height |
| HYD | Hydrant |
| ID | Inside Diameter/Dimension |
| IE | Invert Elevation |
| IF | Inside Face |
| IN | Inch(es) |
| INL | Inlet |
| INT | Intersection |
| INV | Invert (Line) |
| IP(S) | Iron Pipe (Size) |
| IRC | Irrigation Controller |

| | |
|---|---|
| IRRG | Irrigation |
| ISO | Isolation Coupling |
| JB | Junction Box |
| JT | Joint |
| KV | Kilovolt |
| LAL | Limited Access Line |
| LBS | Pounds |
| LF | Linear/Lineal Feet |
| LID | Local Improvement District |
| LIT | Large Inlet Top (Catch Basin) |
| LOC | Locate/Location |
| LONGIT | Longitudinal |
| LP | Light Pole |
| LS | Lump Sum |
| LSCAPE | Landscape, Landscaping |
| LT | Left |
| LUM | Luminaire |
| MA | Mast Arm |
| MAX | Maximum |
| MB | Mailbox |
| MCV | Manual Control Valve |
| MDV | Manual Drain Valve |
| MH | Manhole |
| MIC | Monument in Case |
| MIN | Minimum |
| MIPT | Male Iron Pipe Thread |
| MISC | Miscellaneous |
| MJ | Mechanical Joint |
| ML M/L | Monument Line |
| MNRL AGG | Mineral Aggregate |
| MOD | Modify/Modified |
| MON | Monument |

REF STD SPEC SEC 1-01.2

REV DATE: 2008

| | |
|---|---|
| MW | Monitor Well |
| N | North |
| NAD | North American Datum |
| NAVD | North American Vertical Datum |
| NF | Near Face |
| NGVD | National Geodetic Vertical Datum |
| NIC | Not in Contract |
| NO | Number |
| NOM | Nominal |
| NS | Near Side |
| NTS | Not To Scale |
| OC | On Center |
| OD | Outside Diameter/Dimension |
| OF | Outside Face |
| OH | Overhead |
| PAV | Pavement |
| PC | Point of Curvature |
| PCC | Point of Compound Curve |
| PDP | Perforated Drain Pipe |
| PE | Plain End |
| PED | Pedestrian |
| PG | Performance Grade |
| PH | Phase |
| PI | Point of Intersection |
| PL | Plate, Place |
| ℙ | Property Line |
| POC | Point on Curve |
| PP | Power Pole |
| PPB | Pedestrian Push Button |
| PR | Pair |
| PRC | Point of Reverse Curve |
| PROP | Proposed |
| PRKG | Parking |

| | |
|---|---|
| PRV | Pressure Reducing Valve |
| PS | Pipe Sewer Combined |
| PSD | Pipe Storm Drain |
| PSDD | Pipe Storm Drain Detention |
| PSI | Pounds per Square Inch |
| PSIA | Pounds per Square Inch Absolute |
| PSIG | Pounds per Square Inch Gauge |
| PSS | Pipe Sewer Sanitary |
| PT | Point of Tangency |
| PVB | Pressure Vacuum Breaker |
| PVC | Polyvinyl Chloride |
| PVT | Private |
| QTY | Quantity |
| R | Radius |
| R&R | Remove & Replace |
| R/W | Right of Way |
| RCP | Reinforced Concrete Pipe |
| RD | Roof Drain |
| RDWY | Roadway |
| RECONN | Reconnect |
| RED | Reducer |
| REF | Refer/Reference |
| REINF | Reinforce/Reinforcement |
| RELOC | Relocate |
| REM | Remove |
| REPL | Replace |
| REQD | Required |
| RET | Retire/Retired |
| RET WALL | Retaining Wall |
| RF | Rock Facing |
| RGS | Rigid Galvanized Steel |
| RIT | Round Inlet Top |

REF STD SPEC SEC 1-01.2

REV DATE: 2008

| | |
|---|---|
| RLWY | Railway |
| RP | Rock Pocket |
| RPBA | Reduced Pressure Backflow Assembly |
| RR | Railroad |
| RS | Rigid Steel |
| RT | Right |
| S | South |
| SB | Sandbox |
| SCH | Schedule |
| SCL | Seattle City Light |
| SDS | Street Designation Sign |
| SD | Service Drain |
| SDOT | Seattle Department of Transportation |
| SEC | Section |
| SHLD | Shield |
| SHT | Sheet |
| SL | Sleeve, Street Light |
| ℄ | Survey Line |
| SLHH | Street Light Handhole |
| SNS | Street Name Sign |
| SP | Strain Pole |
| SPCS | Spaces |
| SPEC | Specifications |
| SPU | Seattle Public Utilities |
| SQ | Square |
| SS | Stainless Steel, Side Sewer–Combined |
| SSD | Sub–Surface Drain |
| SSS | Side Sewer–Sanitary |
| SSTONE | Sandstone |
| ST | Street |
| STA | Station |
| STD | Standard |
| STL | Steel |

| | |
|---|---|
| STL P | Steel Pipe |
| STM LOG | Steam Log |
| STRUCT | Structure/Structural |
| SW | Sidewalk |
| SY | Square Yard |
| SYS | System |
| T | Tee |
| TB | Test Boring |
| TC | Traffic Control |
| TCB | Telephone Cable |
| TCD | Telephone Conduit |
| TCHH | Traffic Control Handhole |
| TD | Telephone Duct |
| TEB | Telephone Enclosure Box |
| TEL | Telephone |
| TEMP | Temporary |
| TF | Top Face |
| TH | Test Hole |
| THH | Telephone Handhole |
| TJO | Transfer of Jurisdiction Ordinance |
| TMH | Telephone Manhole |
| TN | Ton |
| TR | Traffic |
| TRCB | Traffic Signal Cable |
| TRCD | Traffic Signal Conduit |
| TRSCC | Traffic Signal Controller Cabinet |
| TVCB | Television Cable |
| TVHH | Television Handhole |
| TYP | Typical |
| UG | Underground |
| UIC | Underground Interconnect |
| UNC | Unified National Course |
| UP | Utility Pole |

REF STD SPEC SEC 1-01.2

| | | |
|---|---|---|
| City of Seattle | NOT TO SCALE | ABBREVIATIONS |

REV DATE: 2008

| | |
|---|---|
| V | Valve, Variable |
| V/C | Vertical Curve |
| VAR | Variable/Varies |
| VB | Vertical Bend |
| VBOX | Valve Box |
| VCH or VC | Valve Chamber |
| VEH | Vehicle |
| VERT | Vertical |
| VMS | Variable Message Sign |
| VO | Vacation Ordinance |
| W | Water, West |
| W/ | With |
| WCR | Wheel Chair Ramp |
| WD | Wood/Wooden |
| WF | Wood Fence |
| WIF | Wrought Iron Fence |
| WM | Water Meter, Water Main |
| WMR | Water Main Radius |
| WP | Wood Pole |
| WS | Water Service |
| WSP | Wood Stave Pipe |
| WU | Western Union |
| WV | Water Valve |
| WWF | Welded Wire Fabric |
| XP | Transmission Pole |
| | |

REF STD SPEC SEC 1-01.2

REV DATE: 2003

| ITEM | EXISTING | LINE WEIGHT | PROPOSED | LINE WEIGHT | CAD NOTES |
|---|---|---|---|---|---|
| Signal Controller Cabinet | | .014 | | .020 | ECAB<br>PCABII or PCABIII<br>draw to size |
| Electrical Vault | EV | .014 | EV | .020 | EVAULT / PEV<br>draw to size |
| Electrical Cable (direct burial) | ECB | .014 | ECB | .024 | LT=ECd 6-1-1-1 |
| Electrical Conduit | 1″ ECD | .014 | 1″ ECD | .024 | LT=ECd 6-1-1-1 |
| Electrical Duct | 12″ X 12″ ED | .014 | 12″ X 12″ ED | .024 | LT=ECd 6-1-1-1 |
| Combined Electrical & Telephone Duct | 12″ X 12″ ED–TD | .014 | 12″ X 12″ ED–TD | .024 | LT=ECd 6-1-1-1 |
| Span Wire | | .014 | | .024 | |
| Aerial Interconnect Cable | AIC | .014 | AIC | .024 | |
| Transmission Pole (steel w/ conc base) | XP | .014 | | .024 | EXP<br>PXP |
| City Wood Pole | PP | .014 | | .024 | EPP<br>PWP |
| City Wood Pole w/ HPS | PP | .014 | | .024 | EPPLT<br>PWP+PBARM+PLUM |

City of Seattle

NOT TO SCALE

STANDARD SYMBOLS
ELECTRICAL

REV DATE: 2003

| ITEM | EXISTING | LINE WEIGHT | PROPOSED | LINE WEIGHT | CAD NOTES |
|---|---|---|---|---|---|
| Light Pole (metal) w/ HPS | LP | .014 | | .024 | ELP<br>PLP+PBARM+PLUM |
| Strain Pole (metal) | (CURB) | .014 | (CURB) | | ESP/PSP |
| Combined Lighting Strain Pole HPS | | .014 | | .024 | ESPLT<br>PSP+PBARM+PLUM |
| Luminaire | | .014 | | | ELUM |
| Mercury Vapor Luminaire | M | .014 | | | EMVL |
| Double Light Pole | | .014 | | | EDBLT |
| Utility Wood Pole | PP | .014 | | .024 | EPP/PUP |
| Utility Guy Pole | GP | .014 | GP | .024 | EPP/PUP |
| Anchor | | .014 | | .024 | EGUY/PGUY |
| Ground | | .014 | | .024 | GND |

| | | |
|---|---|---|
| City of Seattle | NOT TO SCALE | STANDARD SYMBOLS<br>ELECTRICAL |

REV DATE: 2008

| ITEM | EXISTING | LINE WEIGHT | PROPOSED | LINE WEIGHT | CAD NOTES |
|---|---|---|---|---|---|
| Traffic Signal Mast Arm Pole | | .014 | | .028 | ESIG<br>PMAP+PMAST#<br>+PSIGV |
| Traffic Signal Mast Arm Pole w/ Luminaire | | .014 | | .028 | ESIG+ELUM<br>PMAP+PMAST#+<br>PLUM+PSIGV |
| Traffic Signal on Span Wire | | .014 | | .028 | ESIG/PSIGV |
| Multi-Directional Traffic Signal on Span Wire | | .014 | | | ESIG |
| Traffic Signal Conduit | 2″ TRCD | .014 | 2″ TRCD | .028 or .031 | LT=ECd 6-1-1-1 |
| Traffic Signal Cable | TRCB | .014 | TRCB | .028 or .031 | LT=ECd 6-1-1-1 |
| Detector Loop, Dipole (loop schedule) | | .014 | | .020 | ELOOP1<br>PLOOP##<br>drawn to size |
| Detector Loop, Quadrapole (loop schedule) | | .014 | | | ELOOP2 |
| Pressure Detector | | .014 | | | drawn to size |

| | | |
|---|---|---|
| City of Seattle | NOT TO SCALE | STANDARD SYMBOLS<br>ELECTRICAL |

REV DATE: 2005

| ITEM | EXISTING | LINE WEIGHT | PROPOSED | LINE WEIGHT | CAD NOTES |
|---|---|---|---|---|---|
| Signal Pedestal | | .014 | | .020 | EPEDP<br>PPEDP |
| Vehicle Signal | | .014 | | | ESIG |
| Vehicle Signal w/ Backplate | | .014 | | .020 | ESIGNBK<br>PSIGV |
| Vehicle Signal (optically programmed) | | .014 | | .020 | ESIGOP<br>PSIGVOP |
| Pedestrian Signal | | .014 | | .020 | EPEDSIG<br>PSIGP |
| Pedestrian Signal (optically programmed) | | .014 | | .020 | EPEDSGOP<br>PSIGPOP |
| Pedestrian Push Button Pedestal | | .014 | | | EPPBP<br>PPPBP |
| Pedestrian Push Button | | .014 | PPB | .020 | EPPB<br>PPPB |
| Illuminated SIgn | | .014 | | .020 | EILLSIGN<br>PILLSIGN |
| Non-illuminated Sign | | .014 | | .020 | ENILSIGN<br>PNILSIGN |
| Junction Box | | .014 | | | EJB |
| Handhole | HH | .014 | HH | .020 | EHH / PHH# |
| Traffic Control Handhole | TCHH | .014 | TCHH | .020 | EHH<br>PHH# |
| Streel Light Handhole | SLHH | .014 | SLHH | .020 | EHH<br>PHH# |
| Ground Rod Handhole | GRHH | .014 | GRHH | .020 | EHH<br>PHH# |
| Fire Alarm Handhole | FAHH | .014 | FAHH | .020 | EHH |

| | | |
|---|---|---|
| City of Seattle | NOT TO SCALE | STANDARD SYMBOLS<br>ELECTRICAL |

REV DATE: 2005

## SIGNALIZATION

| | CAD NOTES |
|---|---|
| ? Vehicle & Pedestrian Signal Head (?=Identification Number) | PHEX |
| ? Illuminated Traffic Sign (?=Identificaiton Number) | PBOX |
| ? Cable Runs (?=Run Number per Wiring Schedule) | PTRI |
| ? Removal/Relocation Item (?=Identification Number per Removal/Relocation Plan) | PCIR |
| ? Construction Item (?=Identification Number per Signalization Plan) | POVAL |

Signal Poles, Signal Pedestals, Push Button Pedestals & Push Buttons Identified by Number on Signalization Plan.

## CHANNELIZATION & SIGNAGE

| | |
|---|---|
| ? Install Channelization Signage (?=Channelization / Signage Identified on Plan) | INSTALL |
| ? Remove Channelization / Signage (?=Channelization / Signage Identified on Plan) | REMOVAL |
| ? Relocate Signage (?=Signage Identified on Plan) | RELOCATE |

| | | |
|---|---|---|
| City of Seattle | NOT TO SCALE | STANDARD SYMBOLS SIGNALIZATION / CHANNELIZATION & SIGNAGE |

REV DATE: 2005

| ITEM | EXISTING | LINE WEIGHT | PROPOSED | LINE WEIGHT | CAD NOTES |
|---|---|---|---|---|---|
| Cement Concrete Pavement | 6″ CONC | .014 | 6″ CONC PAV | .020 | DOTS<br>Color 22<br>Suggested scale 20<br>Angle 45 |
| Asphalt Concrete Pavement | 2″ ASPH/6″ CONC | .014 | 8″ –402B PAV | .020 | DOTS<br>Color 22<br>Suggested scale 10<br>Angle 45 |
| Asphalt Concrete Surfacing | 2″ ASPH | .014 | 2″ ASPH | .020 | DOTS<br>Color 22<br>Suggested scale 10<br>Angle 45 |
| Curb | | .014 | TYPE 410C CURB | .028 | |
| Cement Concrete Walk | CW | .014 | CW | .020<br>.028 | AR-CONC<br>Color 22<br>Suggested scale 1.0<br>Angle 45 |
| Curb Ramp | | .014 | | .020<br>.028 | EWCR user modified<br>PWCR user modified<br>AR-CONC |
| Conc Dwy | | .014 | | .020<br>.028 | DOTS<br>Color 22<br>Suggested scale 20<br>Angle 45 |
| Cement Concrete Bike Way | 3″ CBW | .014 | 3″ CBW | .020 | AR-CONC<br>Color 22<br>Suggested scale 1.0<br>Angle 45 |
| Asphalt Concrete Bike Way | 3″ ABW | .014 | 3″ ABW | .020 | DOTS<br>Color 22<br>Suggested scale 10<br>Angle 45 |
| Grading | GRADED | .014 | TO BE GRADED | .020 | SPU Customized<br>Command: ASPH |

City of Seattle

NOT TO SCALE

STANDARD SYMBOLS
PAVING

REV DATE: 2003

| ITEM | EXISTING | LINE WEIGHT | PROPOSED | LINE WEIGHT | CAD NOTES |
|---|---|---|---|---|---|
| Manholes | | .014 | MH-7 | .031 | EMH+ECASTC/ PMH<br>LT=MH |
| Inlet<br>Type 250A | | .014 | | .031 | EINL250A<br>PINL250A |
| Inlet<br>Type 250B | | .014 | | .031 | EINL250B<br>PINL250B |
| Inlet<br>Type 252 | | .014 | | .031 | EINL252<br>PINL252 |
| Inlet<br>Type 268 | | .014 | | | EINL250A |
| Catch Basin<br>round inlet top | | .014 | | | ECB-RND |
| Private<br>CB & Inlet | | .014 | | | ECB-PRIV |
| Catch Basin<br>Type 151 (pre 1985) | | .014 | | | ECB151 |
| Catch Basin<br>Type 240A | A | .014 | A | .031 | ECB240A<br>PCB240A |
| Catch Basin<br>Type 240B | B | .014 | B | .031 | ECB240B<br>PCB240B |
| Catch Basin<br>Type 240C | C | .014 | C | .031 | ECB240C<br>PCB240C |
| Catch Basin<br>Type 240D | | | D | .031 | PCB240D |
| Catch Basin<br>Type 241 | | .014 | | .031 | ECB241<br>PCB241 |
| Catch Basin<br>Type 242A | | .014 | | .031 | ECB242A<br>PCB242A |
| Catch Basin<br>Type 242B | | .014 | | .031 | ECB242B<br>PCB242B |
| Catch Basin<br>Type 277A | | .014 | | .031 | ECB277A<br>PCB277A |
| Catch Basin<br>Type 277B | | .014 | | .031 | ECB277B<br>PCB277B |
| Sand Box | SB | .014 | | | ESB |
| Clean Out | | .014 | | .031 | ECO/PCO |

| | | |
|---|---|---|
| City of Seattle | NOT TO SCALE | STANDARD SYMBOLS<br>SEWER & DRAINAGE |

REV DATE: 2003

| ITEM | EXISTING | LINE WEIGHT | PROPOSED | LINE WEIGHT | CAD NOTES |
|---|---|---|---|---|---|
| Concrete Culvert | 12″ CC | .014 | 12″ CC | .024 | LT=PSS |
| Pipe Sewer Combined <1'-0"Dia | 8″ PS | .014 | 8″ PS | .031 | LT=PSS |
| Pipe Sewer Combined ≥1'-0"Dia | 24″ PS | .014 | 24″ PS | .024 | LT=PSS<br>DOTS<br>scale 10 |
| Side Sewer Combined | 6″ SS | .014 | 6″ SS | .028 | LT=SD |
| Pipe Sewer Sanitary <1'-0"Dia | 8″ PSS | .014 | 8″ PSS | .031 | LT=PSS |
| Pipe Sewer Sanitary ≥1'-0"Dia | 24″ PSS | .014 | 24″ PSS | .024 | LT=PSS<br>ANSI31<br>scale 20 / angle 90 |
| Side Sewer Sanitary | 6″ SSS | .014 | 6″ SSS | .028 | LT=SD |
| Pipe Storm Drain <1'-0"Dia | 8″ PSD | .014 | 8″ PSD | .031 | LT-PSS |
| Pipe Storm Drain ≥1'-0"Dia | 24″ PSD | .014 | 24″ PSD | .024 | LT=PSS<br>ANSI31<br>scale 10 |
| Service Drain | 8″ SD | .014 | 8″ SD | .028 | LT=SD |
| Inlet & CB Connection | | .014 | 8″ | .028 | LT=SD |
| Open Ended Pipe | 8″ PSD | .014 | 8″ PSD | .031 | ETIC<br>PTIC |
| Small Ditch or Stream | | .014 | | .020 | LT= ENDITCH<br>LT= PNDITCH |
| Large Ditch or Stream | DITCH | .014 | | .020 | LT= WDITCH |

City of Seattle

NOT TO SCALE

STANDARD SYMBOLS
SEWER & DRAINAGE

REV DATE: 2003

| ITEM | EXISTING | LINE WEIGHT | PROPOSED | LINE WEIGHT | CAD NOTES |
|---|---|---|---|---|---|
| Bench Mark (found or set) | | .014 | | | ESVBM |
| Brass Plug/Cap (found or set) | | .014 | | | ESVBP |
| Hub/Tack (found or set) | | .014 | | | ESVHUB |
| Monument in Case (found or set) | | .014 | | | ESVMIC |
| Conc. Mon. (found or set) | | .014 | | | ESVMON |
| Rebar/Cap, Pipe/Cap Rebar, Iron Pipe (found or set) | | .014 | | | ESVRB |
| Tack/Lead, Tack PK Nail, Spike (found or set) | | .014 | | | ESVTK |
| Bench Mark (not found) | | .007 | | | ESVNFBM |
| Brass Plug/Cap (not found) | | .007 | | | ESVNFBP |
| MIC. (not found) | | .007 | | | ESVNFMIC |
| Conc. Mon. (not found) | | .007 | | | ESVNFMON |
| Rebar/Cap, Pipe/Cap Rebar, Iron Pipe (not found) | | .007 | | | ESVNFRB |
| Tack/Lead, Tack PK Nail, Spike (not found) | | .007 | | | ESVNFTK |
| Survey Shot Point | | .014 | | | ESVSHOTP |

| | | |
|---|---|---|
| City of Seattle | NOT TO SCALE | STANDARD SYMBOLS TOPOGRAPHIC & MISC |

REV DATE: 2003

| ITEM | EXISTING | LINE WEIGHT | PROPOSED | LINE WEIGHT | CAD NOTES |
|---|---|---|---|---|---|
| Center Line | CL | .014 | | | LT=CENTER3 |
| Monument Line | ML | .014 | | | LT=CENTER3 |
| Survey Line | SL | .014 | | | |
| Right of Way Line | | .028 | | | |
| Lot & Ownership Line | | .014 | | | |
| Permanent Easement Line | | .031 | | .02 | LT=EASEMENT |
| Temp Const Easement Line | | | | .07 | LT=DOT2 |
| Vacated Street or Alley | | .028 | | | LT=PSS |
| State Highway Limited Access Line | STATE LAL | .028 | | | LT=BUILDING |
| Building | | .014 | | | LT=BUILDING |
| Chain Link Fence | | .014 | | .014 | LT=CHAIN_LINK_FENCE |
| Wood Fence | | .014 | | .014 | LT=WOOD_FENCE |
| Guardrail | | .014 | | .014 | LT=GUARD_RAIL |
| Rock Facing | | .014 | | .012 | SPU Customized Command: ROCKWALL |
| Rock Facing | | .014 | | | EROCK |
| Riprap | | .014 | | .012 | ERIPRAP<br>PRIPRAP |
| Tree <1'-0" DIA | | .014 | PER DRAWINGS | | EDECIDSM/ECONFSM<br>PDECIDSM/PCONFSM<br>draw to scale |
| Tree ≥1'-0" DIA | | .014 | PER DRAWINGS | | ESTRUNK+ESDCANOP<br>ESTRUNK+PSDCANOP<br>draw to scale |

| City of Seattle | NOT TO SCALE | STANDARD SYMBOLS TOPOGRAPHIC & MISC |
|---|---|---|

REV DATE: 2003

| ITEM | EXISTING | LINE WEIGHT | PROPOSED | LINE WEIGHT | CAD NOTES |
|---|---|---|---|---|---|
| Shrub or Bush | | .014 | | .020 | ESHRUB<br>PSHRUB |
| Ground, Grade Line | | .014 | | .014 | LT=DASHED2 |
| Grade (arrow downhill) | 5.6 | .014 | 5.6 | .014 | |
| Rail Road Tracks | | .014 | | | SPU Customized Command |
| City Limits | CITY OF SEATTLE<br>KING COUNTY | .024 | | | LT=BORDER |
| Slope Line | | | SLOPE LINE | .014 | |
| Contours | 246 | .014 | 246 | .014 | |
| Slope Angle Horiz:Vert | H:V | .014 | H:V | .014 | |
| Vertical Curve | V C | .014 | V C | .014 | |
| Depression | | .014 | | .014 | |
| Stump | | .014 | | | ESTUMP |
| Top of Cut Toe of Fill | | | TOP OF CUT<br>TOE OF FILL | .014 | |
| Dimension Line | | .014 | | .014 | |
| Match Line | | .014 | | .020 | |
| Test Hole & Number (test boring) | (TB)<br>TH-7 | .014 | (TB)<br>TH-7 | .003 | ESVBM |
| Bench Mark | BM | .014 | | | ESVBM |

| | | |
|---|---|---|
| City of Seattle | NOT TO SCALE | STANDARD SYMBOLS<br>TOPOGRAPHIC & MISC |

REV DATE: 2003

| ITEM | EXISTING | LINE WEIGHT | PROPOSED | LINE WEIGHT | CAD NOTES |
|---|---|---|---|---|---|
| Monitor Well | MW | .014 | | | EMWELL |
| Street Name Sign | | .014 | | | ESNS |
| US Mail Box | US | .014 | | | EMAILUS |
| Private Mail Box | | .014 | | | EMAILPVT |
| Bollard | | .014 | | | EBLRD/PBLRD |
| Post | | .014 | | | EPOST |
| Parking Meter | | .014 | | | EPRKM |
| Rectangular Casting | | .014 | | | ECASTR |
| Circular Casting | | .014 | | | ECASTC |
| Column | | .014 | | | ECOLUMN |
| Jersey Barrier | | .014 | | .020 | PJERSEY |
| Tree Pit | | .014 | | .020 | PTPIT or draw to scale |
| North Arrow horizontal | N | | | | NORTHHOR |
| North Arrow vertical | N | .012 | | | NORTHVER |

| City of Seattle | NOT TO SCALE | STANDARD SYMBOLS TOPOGRAPHIC & MISC |
|---|---|---|

REV DATE: 2003

| ITEM | EXISTING | LINE WEIGHT | PROPOSED | LINE WEIGHT | CAD NOTES |
|---|---|---|---|---|---|
| Telephone Cable (direct burial) | TCB | .014 | | | LT=TEL 6-1-1 (typical) |
| Telephone Conduit | 3" TCD | .014 | | | |
| Telephone Duct | 12" X 12" TD | .014 | | | |
| Telephone Enclosure | TEB | .014 | | | ETELENCL |
| Telephone Manhole | TMH | .014 | | | draw to scale |
| Telephone Pole | | .014 | | | |
| Telephone Handhole | THH | .014 | | | EHH draw to scale |
| Television Cable (direct Burial) | TVCB | .014 | | | LT=TV 6-1-1-1 |
| Television Handhole | TVHH | .014 | | | EHH draw to scale |
| Telegraph Manhole | TELEG MH | .014 | | | draw to scale |
| Steam Log | 6" STM 14" X 14" LOG | .014 | | | LT=STEAM 2-2 |
| Steam Vault | STEAM VAULT | .014 | | | draw to scale |
| Gas Main | 12" G | .014 | | | LT=GAS 6-1-6 (typical) |
| Gas Valve | | .014 | | | EVALVE |
| Gas Meter | GM | .014 | | | EGM |
| Gas Regulator | G REG | .014 | | | EGREG |
| Petroleum or Oil | OIL | .014 | | | |
| Abandon(ed) | 2" ECD(ABAN) | .014 | 2" ECD-ABAN | .024 | |

| City of Seattle | NOT TO SCALE | STANDARD SYMBOLS PRIVATE UTILITIES |
|---|---|---|

REV DATE: 2003

| ITEM | EXISTING | LINE WEIGHT | PROPOSED | LINE WEIGHT | CAD NOTES |
|---|---|---|---|---|---|
| Watermain <8"Dia | 6″ W | .014 | 6″ W | .031 | LT=WATER 6-6 (typical) |
| Watermain ≤8"<1'-0"Dia | 8″ W | .014 | 8″ W | .031 | |
| Watermain ≥1'-0"Dia | 24″ W | .014 | 24″ W | .031 | DOTS scale 20 |
| 11 1/4° Bend w/ Conc Blocking | | .014 | 8″ −11 1/4°HBorVB | .031 | EHB11 PHB11 + PCONCBLK |
| 22 1/2° Bend | | .014 | 8″ −22 1/2°HBorVB | .031 | EHB22 PHB22 |
| 45° Bend | | .014 | 8″ −45°HBorVB | .031 | EHB45 PHB45 |
| 90° Bend | | .014 | 8″ −90°HBorVB | .031 | EHB90 PHB90 |
| Cross | | .014 | 8″ X8″ X6″ X6″ CR | .031 | ECROSS / PCROSS |
| Tee | | .014 | 8″ X8″ X6″ T | .031 | ETEE / PTEE |
| Pipe Sleeve | | | | .031 | PSLEEVE |
| Plug w/ Conc Blocking | | .014 | or | .031 | PTIC + PCONCBLK EPLUG |
| Hydrant | | .014 | | .031 | EHYD + ETEE PHYD + PTEE |
| Water Meter | WM | .014 | WM | .031 | EWM / PWM |
| Valve Box | | .014 | | | EVBX |
| Gate Valve | | .014 | 4″ GV W/VBOX | .031 | EVALVE PVALVE |
| Gate Valve w/ Chamber | | .014 | 8″ GV W/CH | .031 | EWGV PWGV |
| Gate Valve w/ Vault Chamber | | .014 | 16″ GV W/VCH | .031 | EWGVVCH PWGVVCH |
| Reducer | 8″ W 4″ W | .014 | 8″ X4″ RED | .031 | ERED / PRED |

| | | |
|---|---|---|
| City of Seattle | NOT TO SCALE | STANDARD SYMBOLS WATER |

REV DATE: 2003

| ITEM | EXISTING | LINE WEIGHT | PROPOSED | LINE WEIGHT | CAD NOTES |
|---|---|---|---|---|---|
| Air Valve | | .014 | | .031 | EAV / PAV |
| Blowoff | | .014 | 1 1/2" BO | .031 | EBO / PBO |
| Butterfly Valve w/ Valve Box | | .014 | 8" BFV W/VBOX | .031 | EVALVE PVALVE |
| Butterfly Valve w/ Chamber | | .014 | 8" BFV W/CH | .031 | EWGV PWGV |
| Water Chamber | | .014 | | | EWCH |
| Sprinkler Head | | .014 | | | ESPRKHD |
| Irrigation Valve | IRR V | .014 | | | EIRRGV |

City of Seattle

NOT TO SCALE

STANDARD SYMBOLS
WATER

REV DATE: 2003

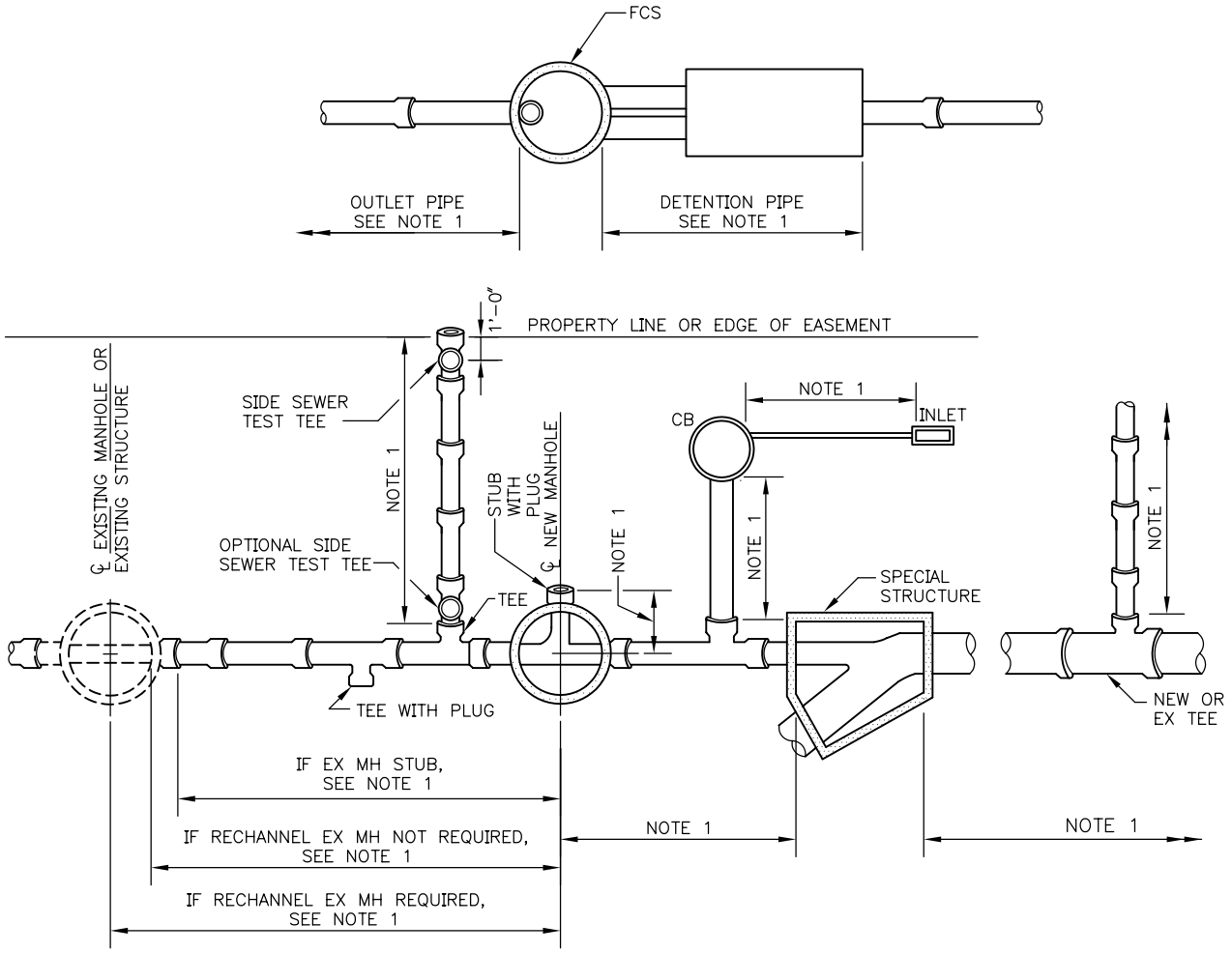


NOTES:

1. MEASUREMENT PER LINEAR FOOT. PIPE ENDING IN STRUCTURE MEASURED TO EITHER INSIDE FACE OR TO CENTERLINE OF STRUCTURE AS INDICATED, OR TO TEE OR WYE AS INDICATED.
2. TEE OR WYE INCLUDING PLUG – UNIT PRICE EACH
3. ALL PIPE SHALL BE MEASURED ON THE SLOPE ALONG THE CENTERLINE OF PIPE TO NEAREST 0.10 LF.

REF STD SPEC DIVISION 7

| | | |
|---|---|---|
| City of Seattle | NOT TO SCALE | SEWER/DRAINAGE MEASUREMENT DIAGRAM |

REV DATE: 2008

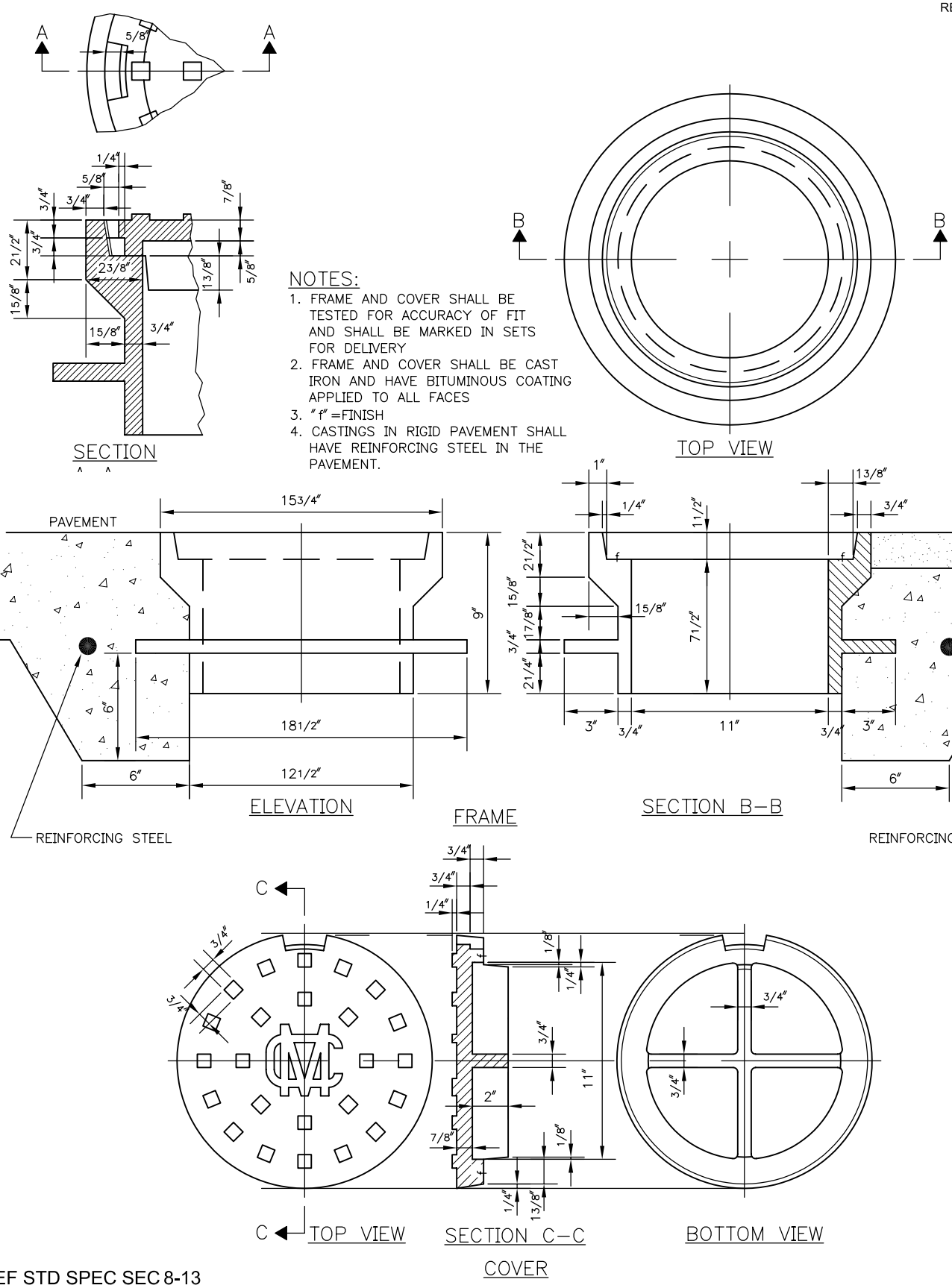


NOTES:

1. FRAME AND COVER SHALL BE TESTED FOR ACCURACY OF FIT AND SHALL BE MARKED IN SETS FOR DELIVERY
2. FRAME AND COVER SHALL BE CAST IRON AND HAVE BITUMINOUS COATING APPLIED TO ALL FACES
3. "f" = FINISH
4. CASTINGS IN RIGID PAVEMENT SHALL HAVE REINFORCING STEEL IN THE PAVEMENT.

REF STD SPEC SEC 8-13

| City of Seattle | NOT TO SCALE | MONUMENT FRAME & COVER |
|---|---|---|

REV DATE: 2008

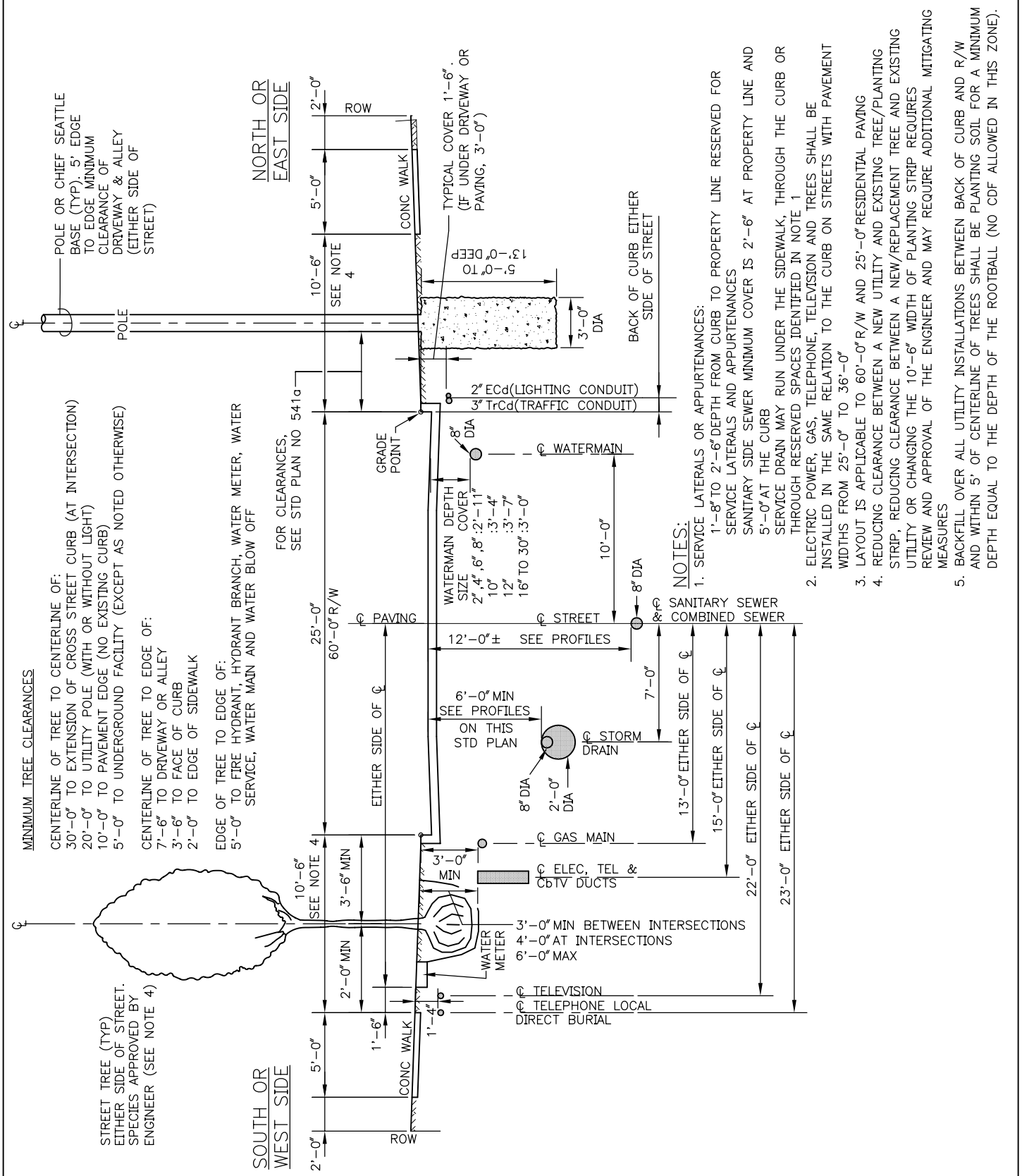


REF STD SPEC SEC 1-07.16, 1-07.17 & 1-07.28

| | | |
|---|---|---|
| City of Seattle | NOT TO SCALE | STANDARD LOCATIONS FOR UTILITIES (RESIDENTIAL STREET) |